EVAPCO, INC.

UNIT	MODEL #	SCALE	DWG. #	REV.	DATE	SERIAL #
EVAPORATIVE CONDENSER	ATC-DC-2012I-35-2EF	N.T.S.	EGCH6M1204-DRA-ST	-	12/14/2025	

NOTES:
1. (M)- FAN MOTOR LOCATION
2. HEAVIEST SECTION IS COIL SECTION
3. MPT DENOTES MALE PIPE THREAD
   FPT DENOTES FEMALE PIPE THREAD
   BFW DENOTES BEVELED FOR WELDING
4. +UNIT WEIGHT DOES NOT INCLUDE ACCESSORIES (SEE ACCESSORY DRAWINGS)
5. MAKE-UP WATER PRESSURE
   20 psi MIN [137 kPa], 50 psi MAX [344 kPa]
6. DIMENSIONS LISTED AS FOLLOWS:
   ENGLISH IN
   [METRIC] [mm]
7. * - APPROXIMATE DIMENSIONS DO NOT USE FOR PRE-FABRICATION OF CONNECTING PIPING.

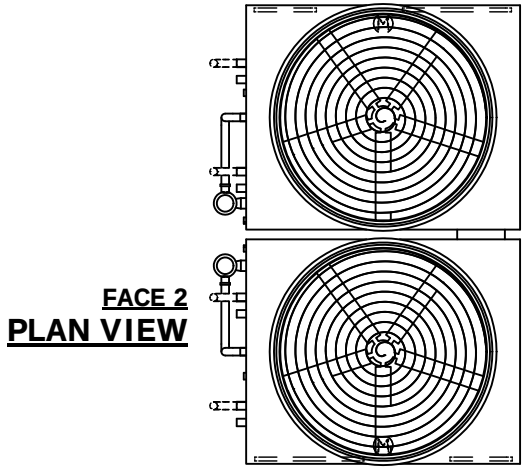

FACE 2
PLAN VIEW

FACE 1

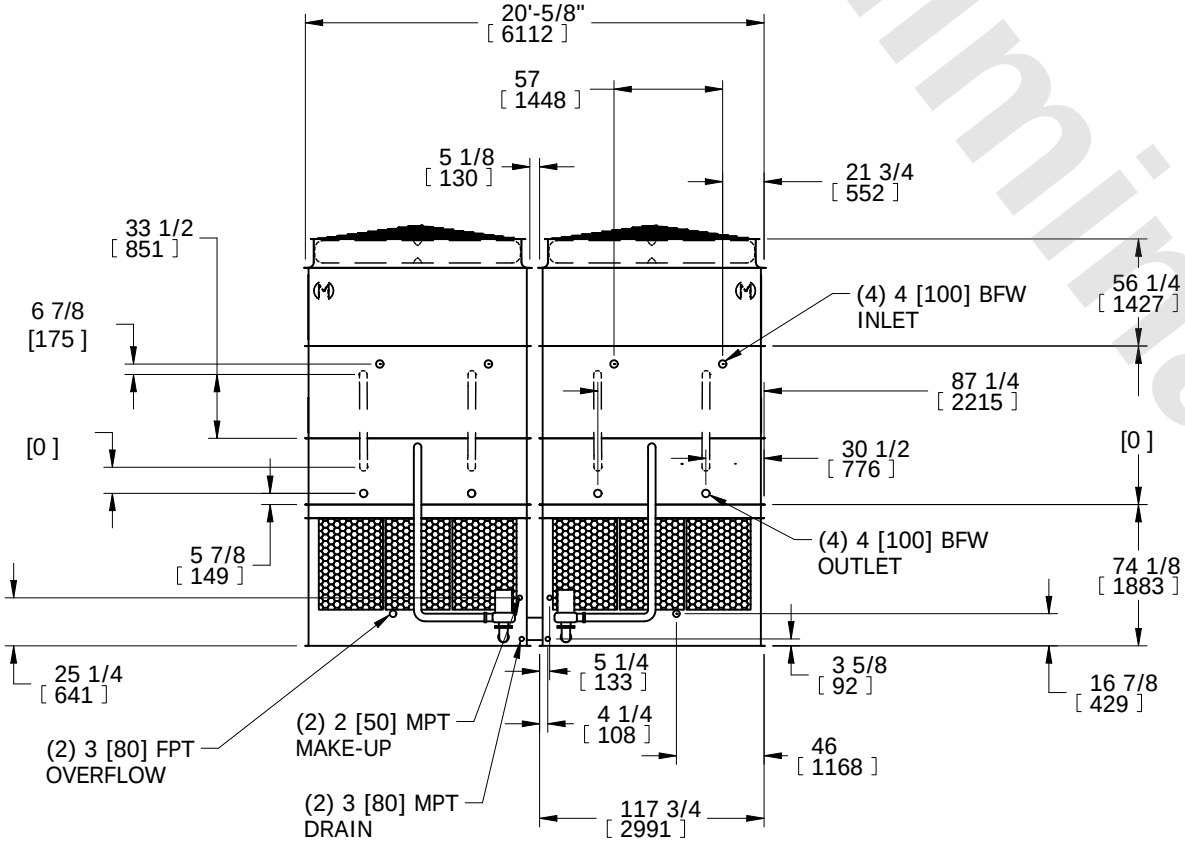

FACE 2

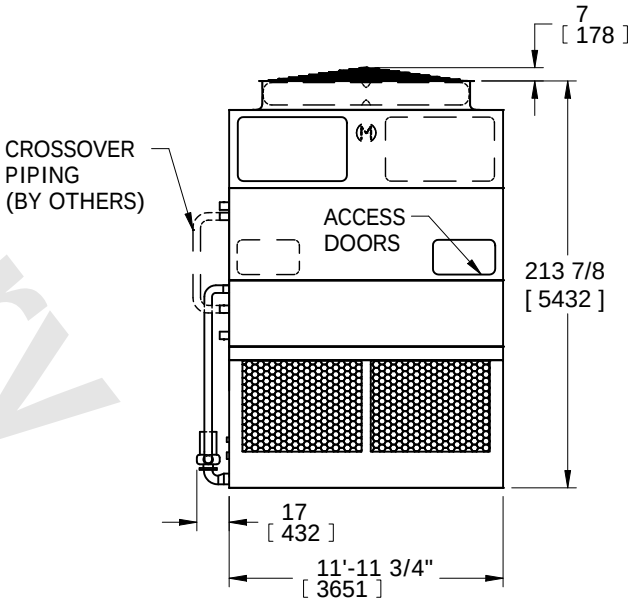

FACE 1

Preliminary

SHIPPING WEIGHT	OPERATING WEIGHT	HEAVIEST SECTION WEIGHT	NO. OF SHIPPING SECTIONS	DRAWN BY:
37920 lbs+ [17205] kg+	50830 lbs+ [23060] kg+	16350 lbs+ [7420] kg+	6	SFR