UNIT	CONDENSER		EVAPCO, INC.	DWG. #	CW4C072808-DRA-ST	REV	-
MODEL #	ATC-592E	SCALE	NTS	SERIAL #		DATE:	2/7/2026

NOTES
1. (M)- FAN MOTOR LOCATION
2. HEAVIEST SECTION IS FAN/CASING SECTION
3. MPT DENOTES MALE PIPE THREAD
   FPT DENOTES FEMALE PIPE THREAD
   BFW DENOTES BEVELED FOR WELDING
   GVD DENOTES GROOVED
   FLG DENOTES FLANGE
   PE DENOTES PLAIN END
4. +UNIT WEIGHT DOES NOT INCLUDE ACCESSORIES (SEE ACCESSORY DRAWINGS)
5. MAKE-UP WATER PRESSURE 20 psi MIN [137 kPa], 50 psi MAX [344 kPa]
6. *-APPROXIMATE DIMENSIONS DO NOT USE FOR PRE-FABRICATION OF CONNECTING PIPING
7. 3/4" [19mm] DIA. MOUNTING HOLES. REFER TO RECOMMENDED STEEL SUPPORT DRAWING.
8. DIMENSIONS LISTED AS FOLLOWS:
   ENGLISH FT-IN
   METRIC [mm]

Preliminary

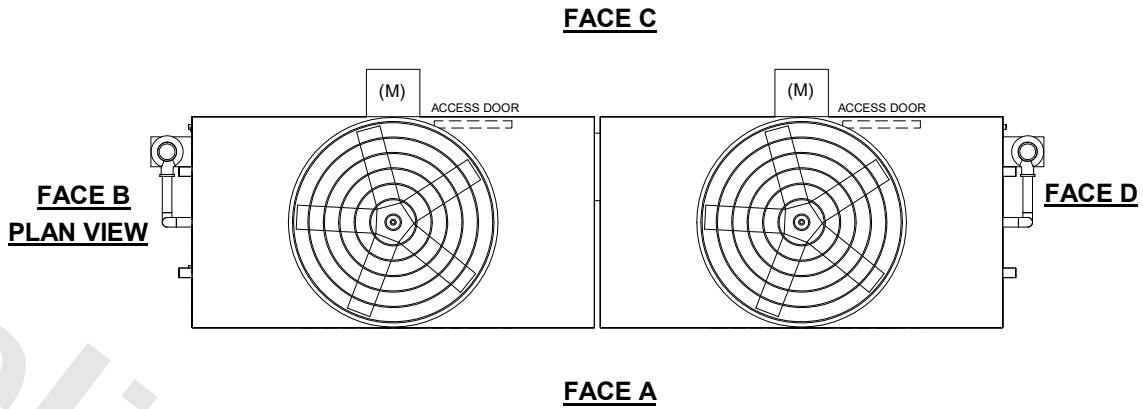

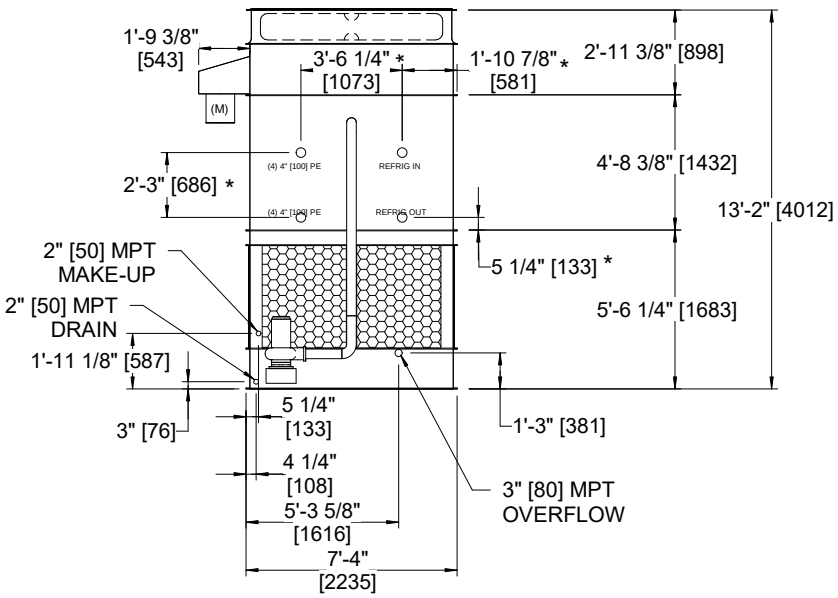

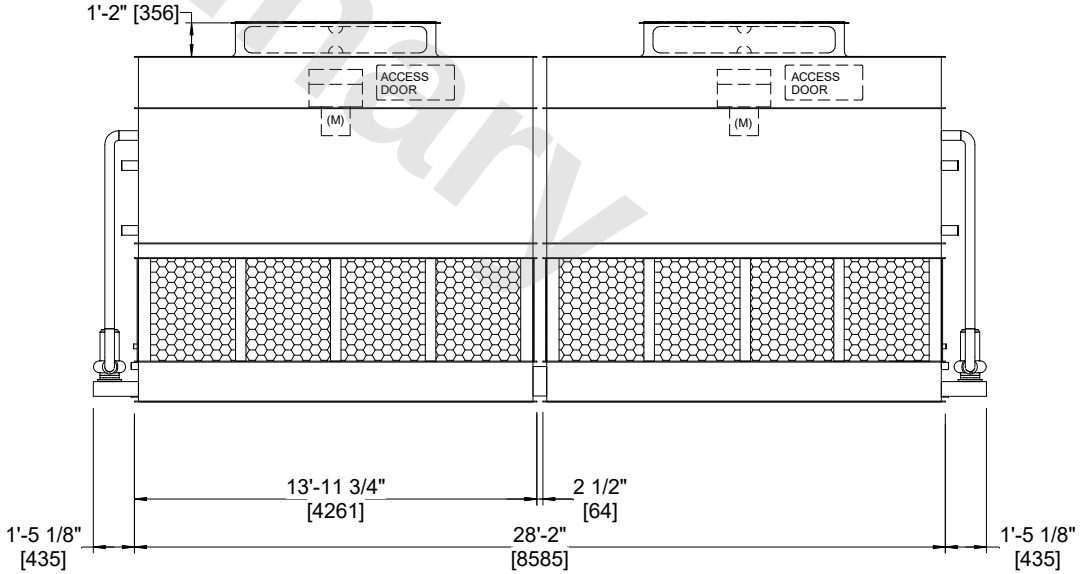

SHIPPING WEIGHT	24360 lbs+ [11050] kg+	OPERATING WEIGHT	26110 lbs+ [11845] kg+	HEAVIEST SECTION WEIGHT	9990 lbs+ [4535] kg+	NO. OF SHIPPING SECTIONS	4	DRAWN BY:	JLG