| UNIT | CONDENSER | | EVAPCO, INC. | DWG. # | CW4C072812-DRA-ST | REV | - |
|---|---|---|---|---|---|---|---|
| MODEL # | ATC-749E | SCALE | NTS | SERIAL # | | DATE: | 7/17/2025 |

NOTES
1. (M)- FAN MOTOR LOCATION
2. HEAVIEST SECTION IS FAN/CASING SECTION
3. MPT DENOTES MALE PIPE THREAD
   FPT DENOTES FEMALE PIPE THREAD
   BFW DENOTES BEVELED FOR WELDING
   GVD DENOTES GROOVED
   FLG DENOTES FLANGE
   PE DENOTES PLAIN END
4. +UNIT WEIGHT DOES NOT INCLUDE ACCESSORIES (SEE ACCESSORY DRAWINGS)
5. MAKE-UP WATER PRESSURE 20 psi MIN [137 kPa], 50 psi MAX [344 kPa]
6. *-APPROXIMATE DIMENSIONS DO NOT USE FOR PRE-FABRICATION OF CONNECTING PIPING
7. 3/4" [19mm] DIA. MOUNTING HOLES. REFER TO RECOMMENDED STEEL SUPPORT DRAWING.
8. DIMENSIONS LISTED AS FOLLOWS:
   ENGLISH FT-IN
   METRIC [mm]

Preliminary

**FACE C**

**FACE B**
**PLAN VIEW**

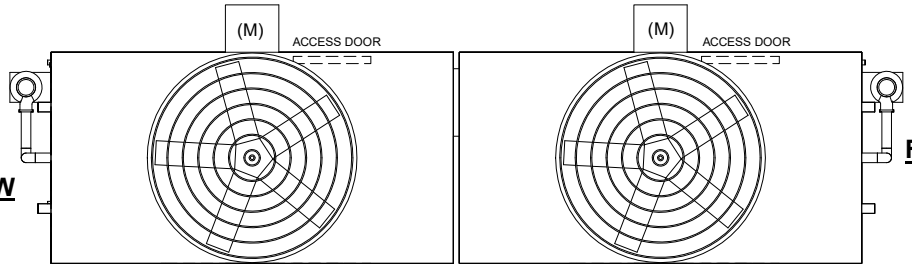


**FACE D**

**FACE A**

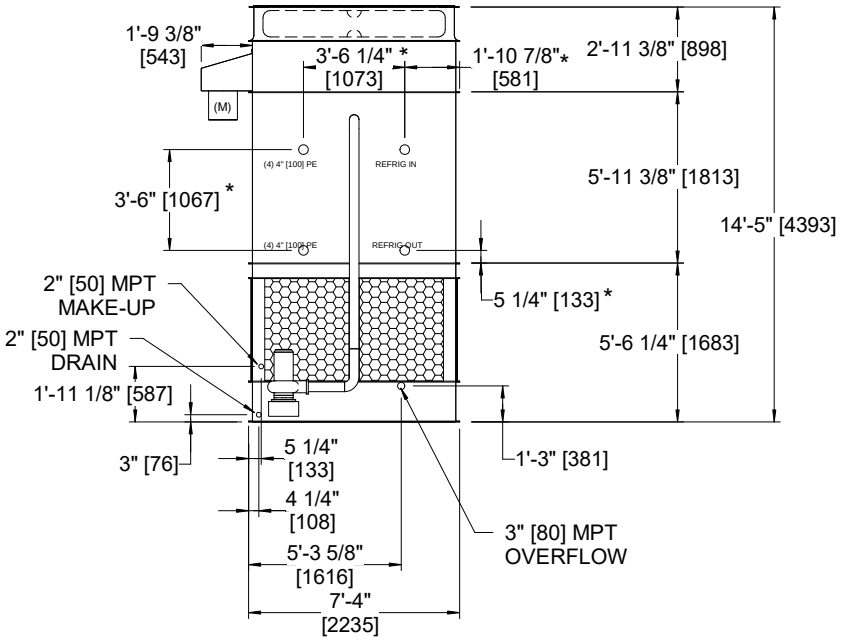


**FACE B**

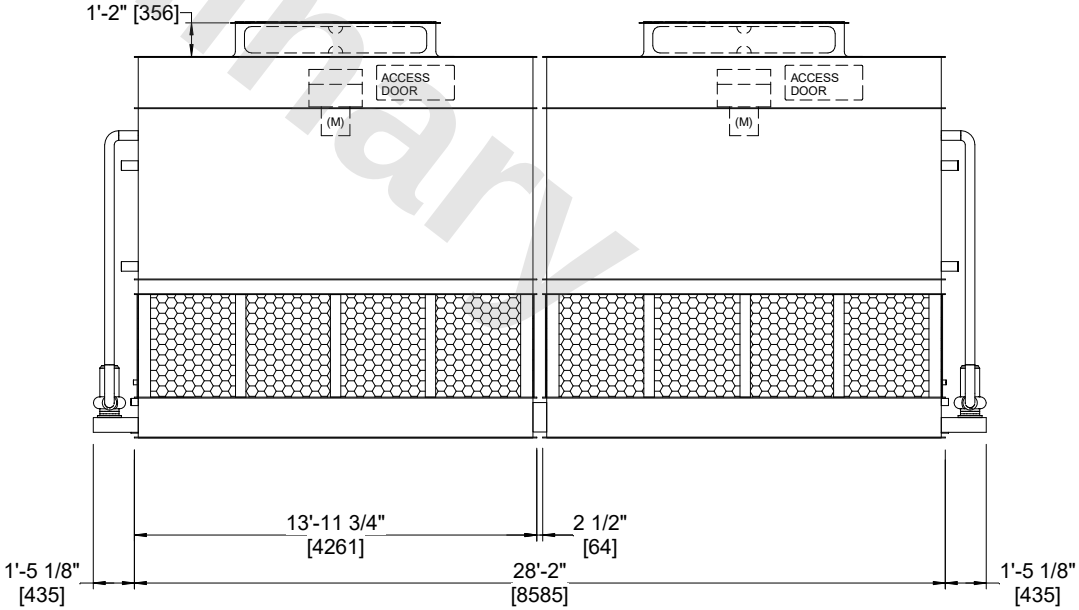


**FACE A**

| SHIPPING WEIGHT | 31100 lbs+ [14110] kg+ | OPERATING WEIGHT | 33120 lbs+ [15025] kg+ | HEAVIEST SECTION WEIGHT | 13360 lbs+ [6060] kg+ | NO. OF SHIPPING SECTIONS | 4 | DRAWN BY: | JLG |
|---|---|---|---|---|---|---|---|---|---|