| UNIT | CLOSED CIRCUIT COOLER | | | DWG. # | WV050910-DRC-ST | REV. | - |
|---|---|---|---|---|---|---|---|
| MODEL # | LRWB 5-5I9 | SCALE | NTS | SERIAL # | | DATE | 11/6/2025 |

# EVAPCO, INC.

NOTES:
1. (M)- FAN MOTOR LOCATION
2. MPT DENOTES MALE PIPE THREAD
   FPT DENOTES FEMALE PIPE THREAD
   BFW DENOTES BEVELED FOR WELDING
   GVD DENOTES GROOVED
   FLG DENOTES FLANGE
   PE DENOTES PLAIN END
3. +UNIT WEIGHT DOES NOT INCLUDE ACCESSORIES (SEE ACCESSORY DRAWINGS)
4. 3/4" [19mm] DIA. MOUNTING HOLES. REFER TO RECOMMENDED STEEL SUPPORT DRAWING
5. DIMENSIONS LISTED AS FOLLOWS: ENGLISH FT IN [METRIC] [mm]
6. * - APPROXIMATE DIMENSIONS DO NOT USE FOR PRE-FABRICATION OF CONNECTING PIPING
7. MAKE-UP WATER PRESSURE 20 psi [137 kPa] MIN, 50 psi [344 kPa] MAX

Preliminary

**FACE B**

**PLAN VIEW**

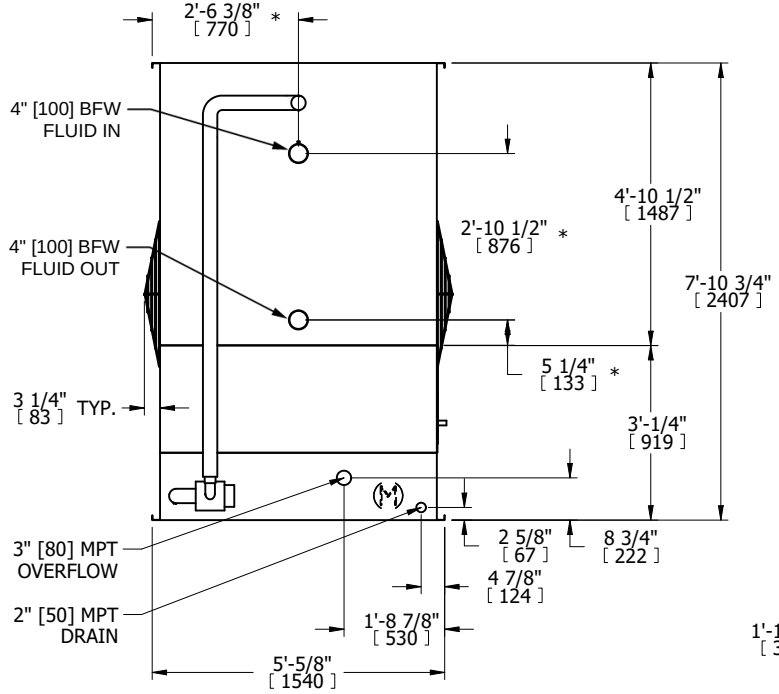


**FACE B**

**FACE C**

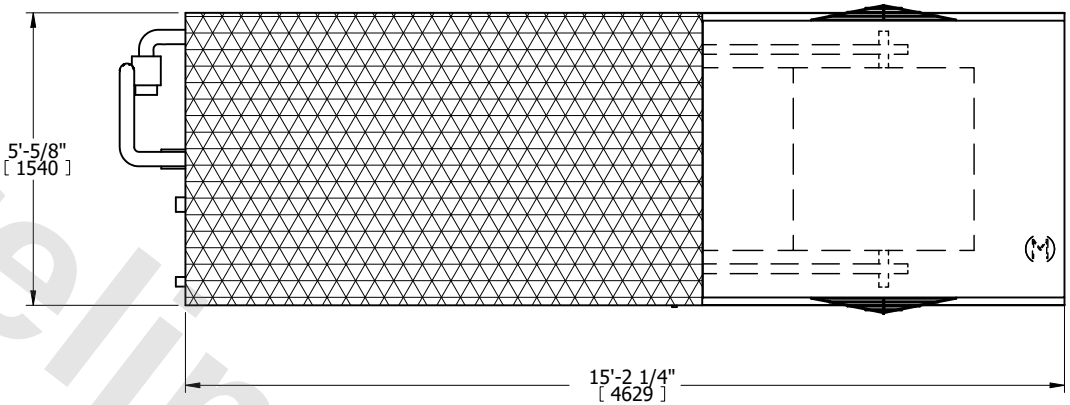


**FACE D**

**FACE A**

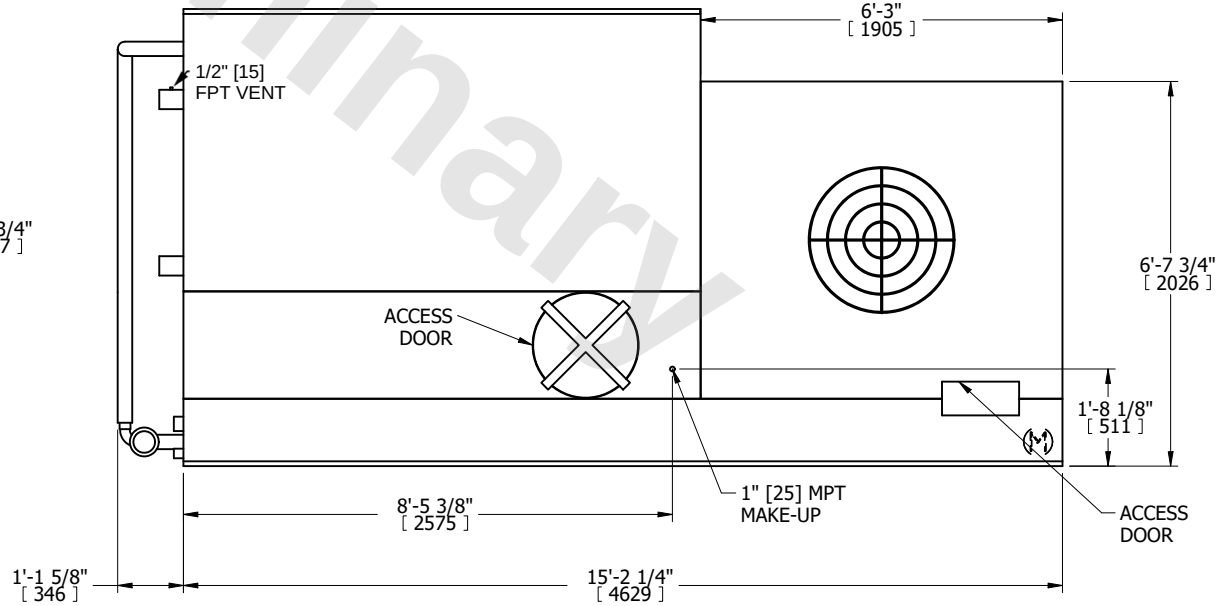


**FACE A**

| SHIPPING WEIGHT | 6350 lbs+ [2885] kg+ | OPERATING WEIGHT | 10230 lbs+ [4645] kg+ | HEAVIEST SECTION WEIGHT | 6350 lbs+ [2885] kg+ | NO. OF SHIPPING SECTIONS | 1 | DRAWN BY: | TLS |
|---|---|---|---|---|---|---|---|---|---|