UNIT	CLOSED CIRCUIT COOLER			DWG. #	WLEP83614-DRD-SF	REV.	-
MODEL #	LSWE 8P-7P36-Z	SCALE	NTS	SERIAL #		DATE	6/8/2026

EVAPCO, INC.

NOTES:
1. (M)- FAN MOTOR LOCATION
2. MPT DENOTES MALE PIPE THREAD
   FPT DENOTES FEMALE PIPE THREAD
   BFW DENOTES BEVELED FOR WELDING
   GVD DENOTES GROOVED
   FLG DENOTES FLANGE
   PE DENOTES PLAIN END
3. +UNIT WEIGHT DOES NOT INCLUDE ACCESSORIES (SEE ACCESSORY DRAWINGS)
4. 3/4" [19mm] DIA. MOUNTING HOLES. REFER TO RECOMMENDED STEEL SUPPORT DRAWING
5. DIMENSIONS LISTED AS FOLLOWS: ENGLISH FT IN [METRIC] [mm]
6. * - APPROXIMATE DIMENSIONS DO NOT USE FOR PRE-FABRICATION OF CONNECTING PIPING
7. HEAVIEST SECTION IS COIL SECTION
8. MAKE-UP WATER PRESSURE 20 psi [137 kPa] MIN, 50 psi [344 kPa] MAX
9. SERIES FLOW PIPING AND AUX. CROSSOVER DRAIN ARE BY OTHERS

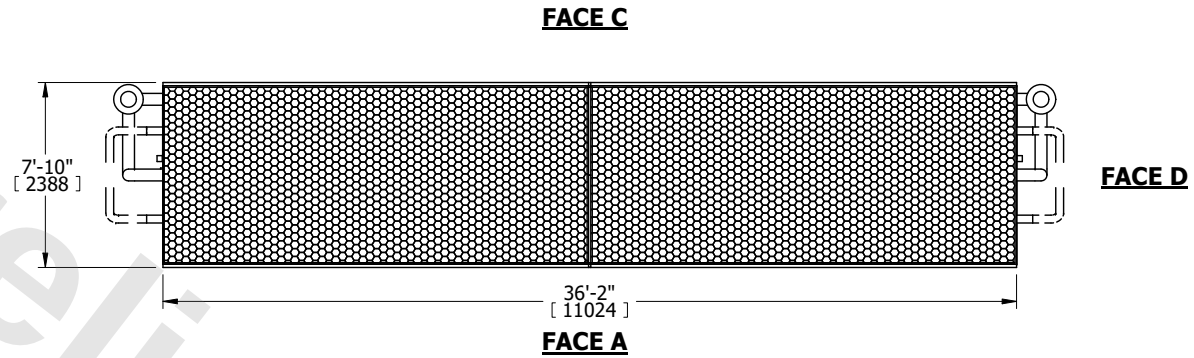

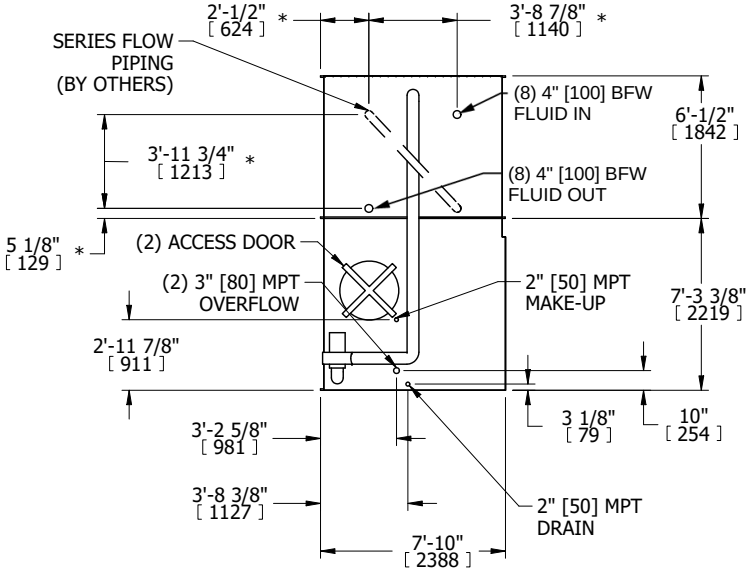

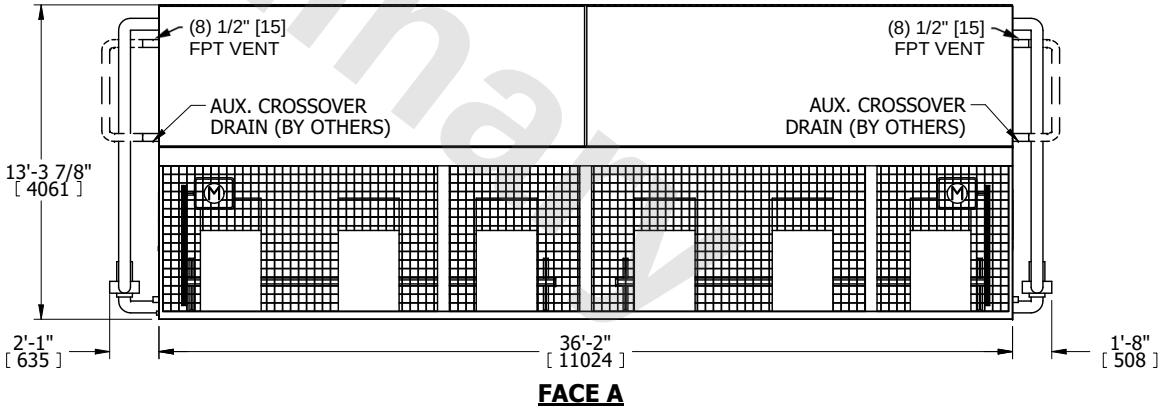

Preliminary

SHIPPING WEIGHT	46870 lbs+ [21260] kg+	OPERATING WEIGHT	68430 lbs+ [31040] kg+	HEAVIEST SECTION WEIGHT	17390 lbs+ [7890] kg+	NO. OF SHIPPING SECTIONS	3	DRAWN BY:	TLS