UNIT	CLOSED CIRCUIT COOLER		EVAPCO, INC.	DWG. #	WLETM2410-DRD-SF	REV.	-
MODEL #	LSWE 10-5M24-Z	SCALE	NTS	SERIAL #		DATE	8/21/2025

NOTES:
1. (M)- FAN MOTOR LOCATION
2. MPT DENOTES MALE PIPE THREAD
   FPT DENOTES FEMALE PIPE THREAD
   BFW DENOTES BEVELED FOR WELDING
   GVD DENOTES GROOVED
   FLG DENOTES FLANGE
   PE DENOTES PLAIN END
3. +UNIT WEIGHT DOES NOT INCLUDE ACCESSORIES (SEE ACCESSORY DRAWINGS)
4. 3/4" [19mm] DIA. MOUNTING HOLES. REFER TO RECOMMENDED STEEL SUPPORT DRAWING
5. DIMENSIONS LISTED AS FOLLOWS: ENGLISH FT IN [METRIC] [mm]
6. * - APPROXIMATE DIMENSIONS DO NOT USE FOR PRE-FABRICATION OF CONNECTING PIPING
7. HEAVIEST SECTION IS COIL SECTION
8. MAKE-UP WATER PRESSURE 20 psi [137 kPa] MIN, 50 psi [344 kPa] MAX
9. SERIES FLOW PIPING AND AUX. CROSSOVER DRAIN ARE BY OTHERS

Preliminary

FACE C

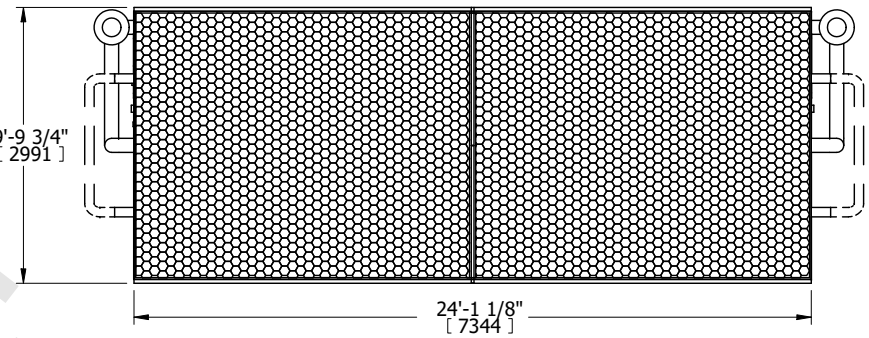

FACE B **FACE D**

PLAN VIEW

FACE A

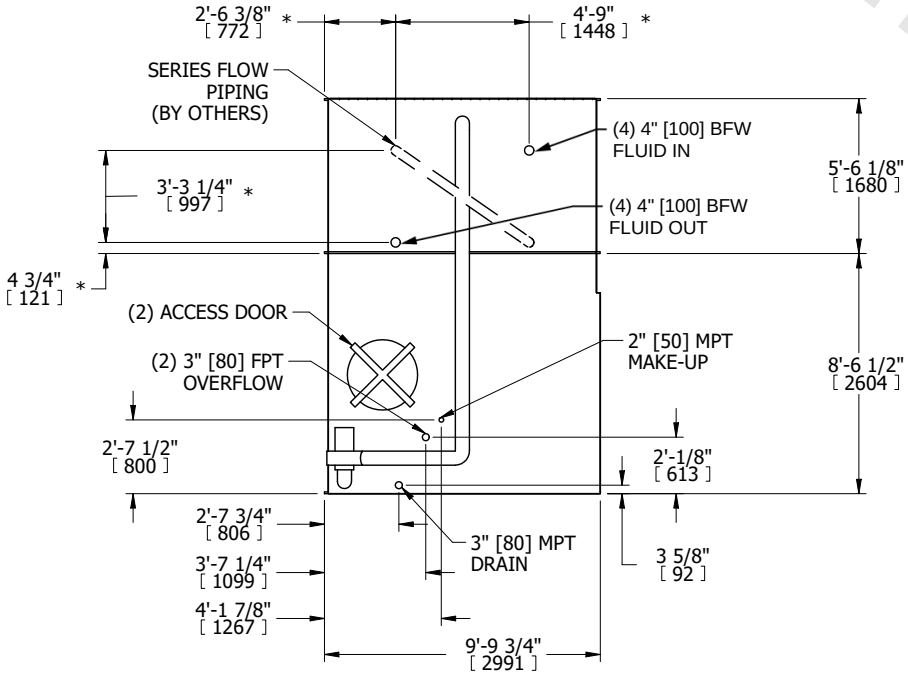

FACE B

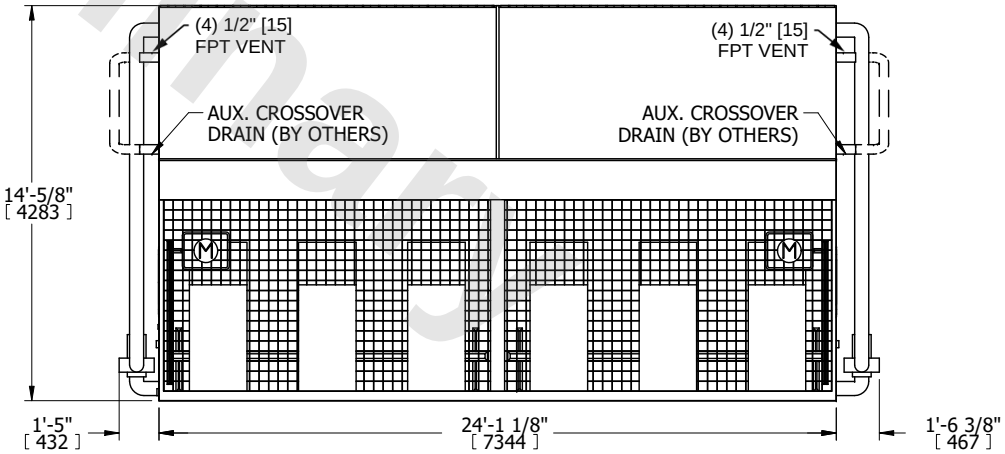

FACE A

SHIPPING WEIGHT	33300 lbs+ [15105] kg+	OPERATING WEIGHT	49040 lbs+ [22245] kg+	HEAVIEST SECTION WEIGHT	11610 lbs+ [5270] kg+	NO. OF SHIPPING SECTIONS	3	DRAWN BY:	TLS