UNIT	CLOSED CIRCUIT COOLER	EVAPCO, INC.	DWG. # WB3090812-DRC-ST	REV. -
MODEL # eco-ATWB 9-6H8	SCALE NTS		SERIAL #	DATE 11/22/2025

NOTES:
1. (M)- FAN MOTOR LOCATION
2. HEAVIEST SECTION IS UPPER SECTION
3. MPT DENOTES MALE PIPE THREAD
   FPT DENOTES FEMALE PIPE THREAD
   BFW DENOTES BEVELED FOR WELDING
   GVD DENOTES GROOVED
   FLG DENOTES FLANGE
   PE DENOTES PLAIN END
4. +UNIT WEIGHT DOES NOT INCLUDE ACCESSORIES (SEE ACCESSORY DRAWINGS)
5. MAKE-UP WATER PRESSURE 20 psi MIN [137 kPa], 50 psi MAX [344 kPa]
6. *-APPROXIMATE DIMENSIONS DO NOT USE FOR PRE-FABRICATION OF CONNECTING PIPING
7. 3/4" [19mm] DIA. MOUNTING HOLES. REFER TO RECOMMENDED STEEL SUPPORT DRAWING.
8. DIMENSIONS LISTED AS FOLLOWS:
   ENGLISH FT-IN
   METRIC [mm]

Preliminary

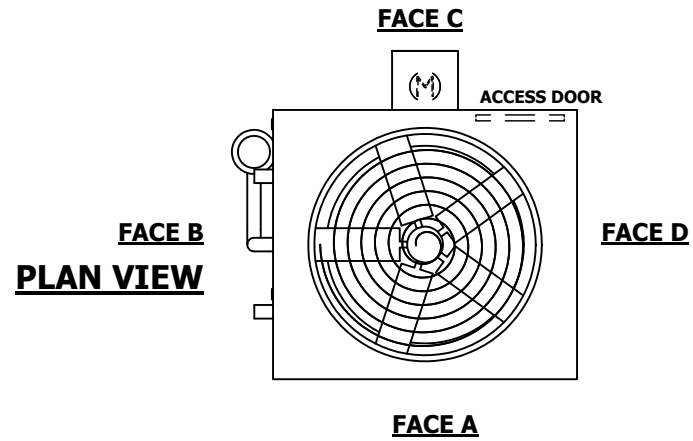

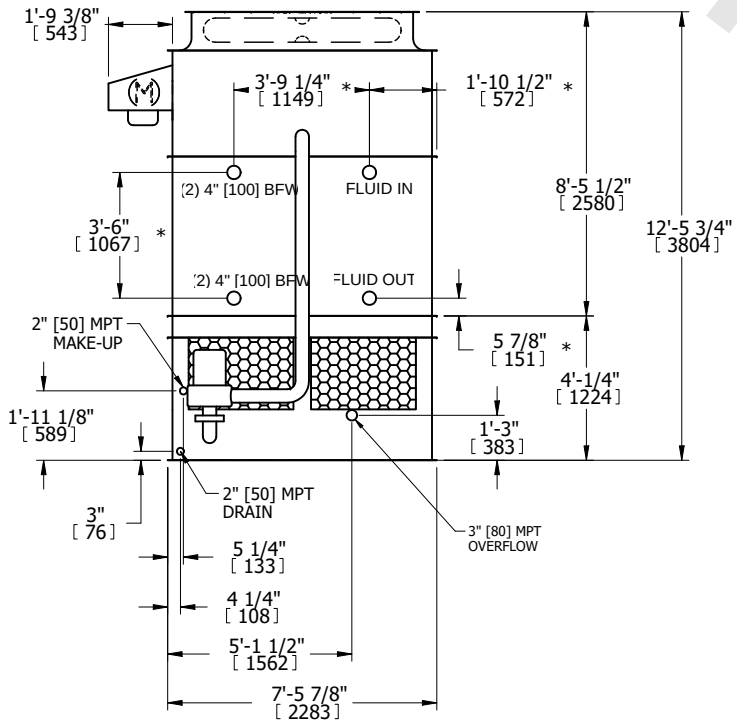

FACE B

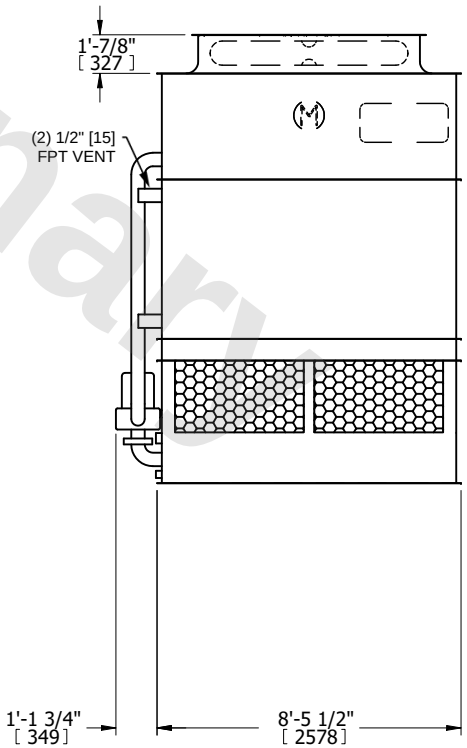

FACE A

SHIPPING WEIGHT	12160 lbs+ [5520] kg+	OPERATING WEIGHT	16720 lbs+ [7585] kg+	HEAVIEST SECTION WEIGHT	10860 lbs+ [4930] kg+	NO. OF SHIPPING SECTIONS	2	DRAWN BY: SLR