| UNIT | CLOSED CIRCUIT COOLER | | EVAPCO, INC. | DWG. # WB3171208-DRD-SF | REV. - |
|---|---|---|---|---|---|
| MODEL # eco-ATWB 17-4L12-Z | | SCALE NTS | | SERIAL # | DATE 9/13/2025 |

NOTES:
1. (M)- FAN MOTOR LOCATION
2. HEAVIEST SECTION IS UPPER SECTION
3. MPT DENOTES MALE PIPE THREAD
   FPT DENOTES FEMALE PIPE THREAD
   BFW DENOTES BEVELED FOR WELDING
   GVD DENOTES GROOVED
   FLG DENOTES FLANGE
   PE DENOTES PLAIN END
4. +UNIT WEIGHT DOES NOT INCLUDE ACCESSORIES (SEE ACCESSORY DRAWINGS)
5. MAKE-UP WATER PRESSURE 20 psi MIN [137 kPa], 50 psi MAX [344 kPa]
6. *-APPROXIMATE DIMENSIONS DO NOT USE FOR PRE-FABRICATION OF CONNECTING PIPING
7. SERIES FLOW PIPING AND AUX. CROSSOVER DRAIN BY OTHERS.
8. 3/4" [19mm] DIA. MOUNTING HOLES. REFER TO RECOMMENDED STEEL SUPPORT DRAWING.
9. DIMENSIONS LISTED AS FOLLOWS:
   ENGLISH FT-IN
   METRIC [mm]

Preliminary

**FACE C**

**FACE B**

**PLAN VIEW**

**FACE D**

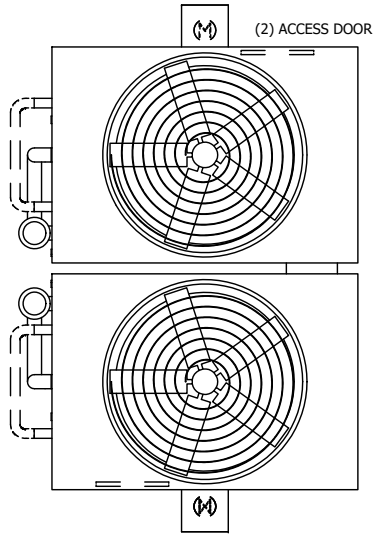


**FACE A**

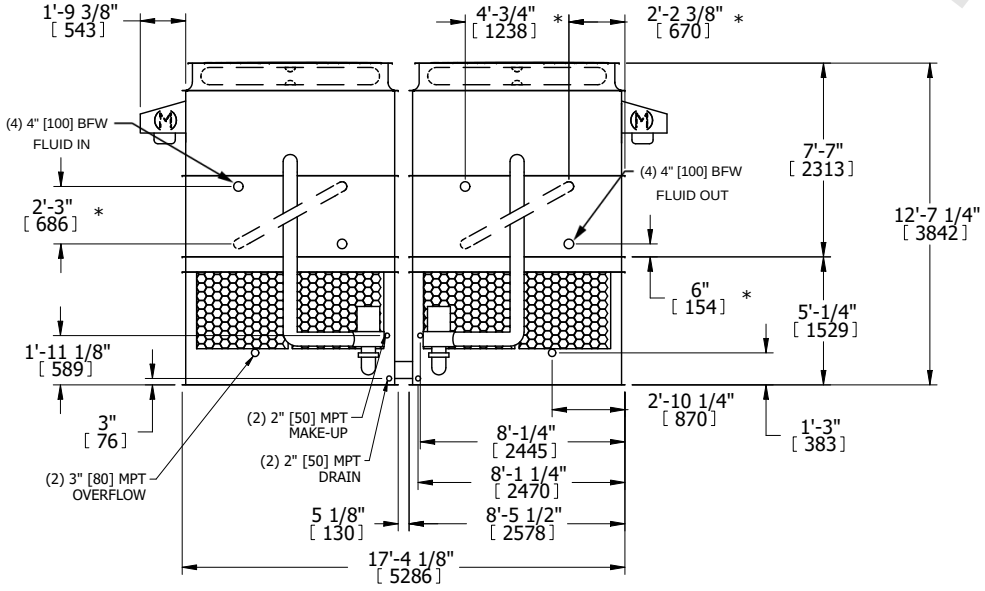


**FACE B**

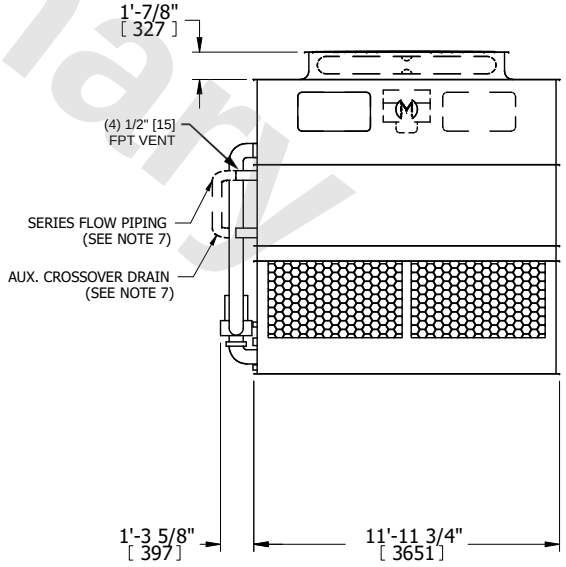


**FACE A**

| SHIPPING WEIGHT | 28620 lbs+ [12985] kg+ | OPERATING WEIGHT | 40600 lbs+ [18420] kg+ | HEAVIEST SECTION WEIGHT | 12440 lbs+ [5645] kg+ | NO. OF SHIPPING SECTIONS | 4 | DRAWN BY: | JLG |
|---|---|---|---|---|---|---|---|---|---|