# EVAPCO, INC.

| UNIT | MODEL # | SCALE | DWG. # | REV. | DATE | SERIAL # |
|---|---|---|---|---|---|---|
| CLOSED CIRCUIT COOLER | eco-ATWB-H 17-3J12-U12 | N.T.S. | EGH1712MR-DRD-ST | - | 5/1/2026 | |

NOTES:
1. (M)- FAN MOTOR LOCATION
2. HEAVIEST SECTION IS COIL SECTION
3. MPT DENOTES MALE PIPE THREAD
   FPT DENOTES FEMALE PIPE THREAD
   BFW DENOTES BEVELED FOR WELDING
4. +UNIT WEIGHT DOES NOT INCLUDE ACCESSORIES (SEE ACCESSORY DRAWINGS)
5. MAKE-UP WATER PRESSURE 20 psi MIN [137 kPa], 50 psi MAX [344 kPa]
6. DIMENSIONS LISTED AS FOLLOWS:
   ENGLISH IN
   [METRIC] [mm]
7. * - APPROXIMATE DIMENSIONS DO NOT USE FOR PRE-FABRICATION OF CONNECTING PIPING.

Preliminary

**FACE 2**
**PLAN VIEW**

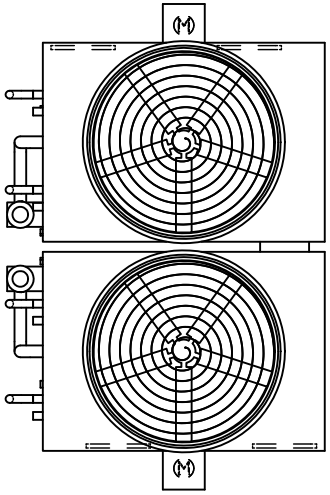


**FACE 1**

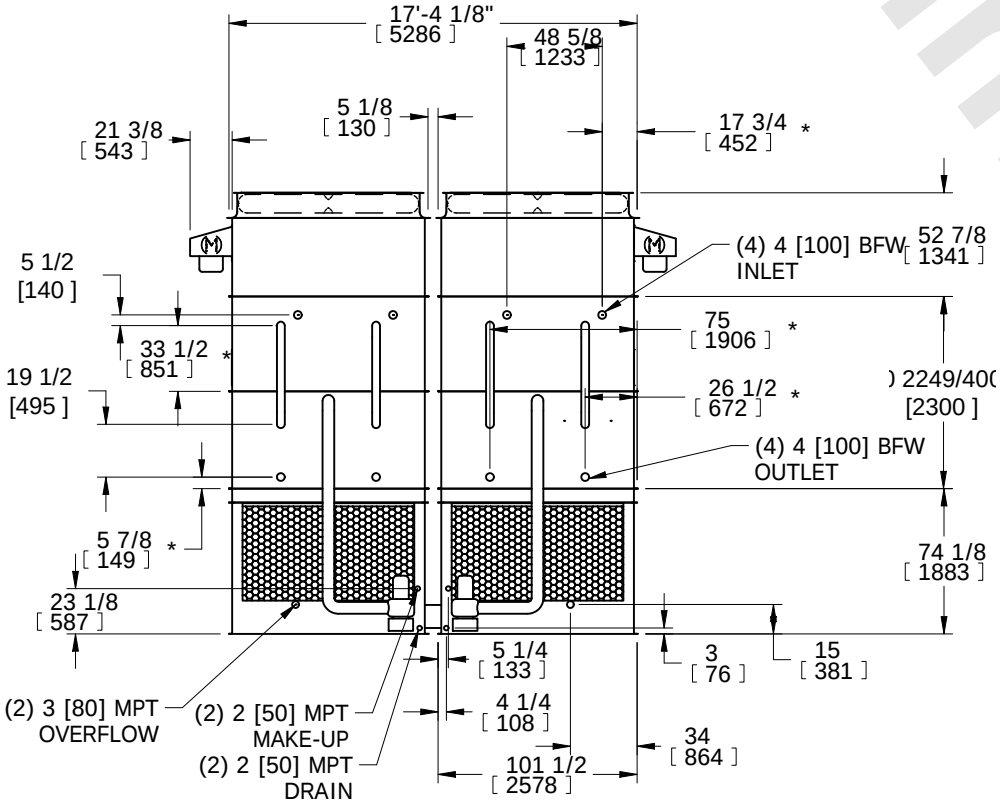


**FACE 2**

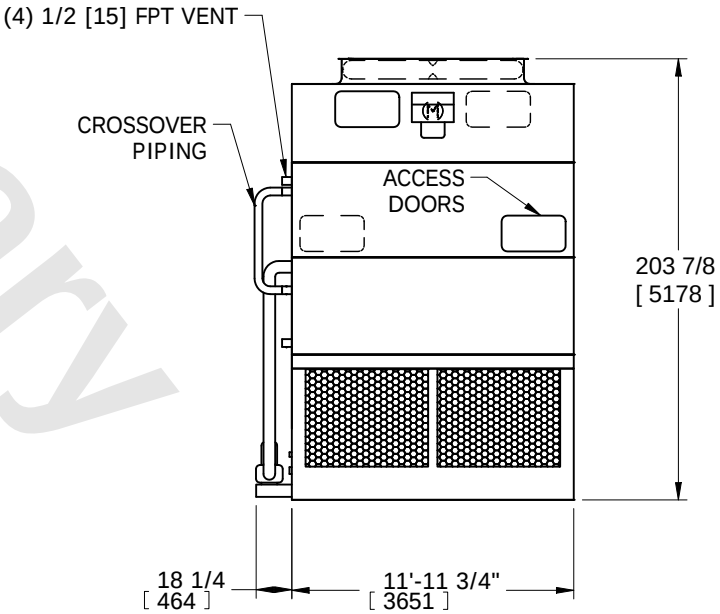


**FACE 1**

| SHIPPING WEIGHT | OPERATING WEIGHT | HEAVIEST SECTION WEIGHT | NO. OF SHIPPING SECTIONS | DRAWN BY: |
|---|---|---|---|---|
| 28830 lbs+ [13080] kg+ | 39410 lbs+ [17880] kg+ | 10130 lbs+ [4595] kg+ | 6 | SFR |