CONFIDENTIAL
This document is the property of Evapco, Inc. It should not be copied or disclosed without prior written authorization.

EVAPCO, INC.

CUSTOMER	MODEL #	SCALE	DWG. #	REV.	DATE
	SSTMB4-5666E0033F1KA	N.T.S.	STMC4-SE-24	0	6/27/2026

NOTES:

1) * = HANGER HOLE LOCATION.
2) RIGHT HAND MODEL SHOWN.
3) HANGER HOLES ARE FOR 3/4 INCH THREADED ROD.
4) WATER DEFROST ADDS 1 3/4" INCHES TO HEIGHT OF STANDARD UNIT AND CHANGES DRAIN SIZE.
5) ALL DIMENSIONS ARE FOR REFERENCE AND SHOULD NOT BE USED FOR PREFABRICATION OF PIPING OR SUPPORTS.

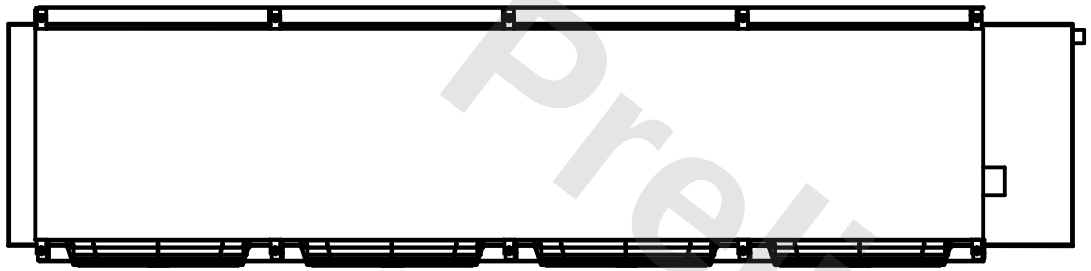

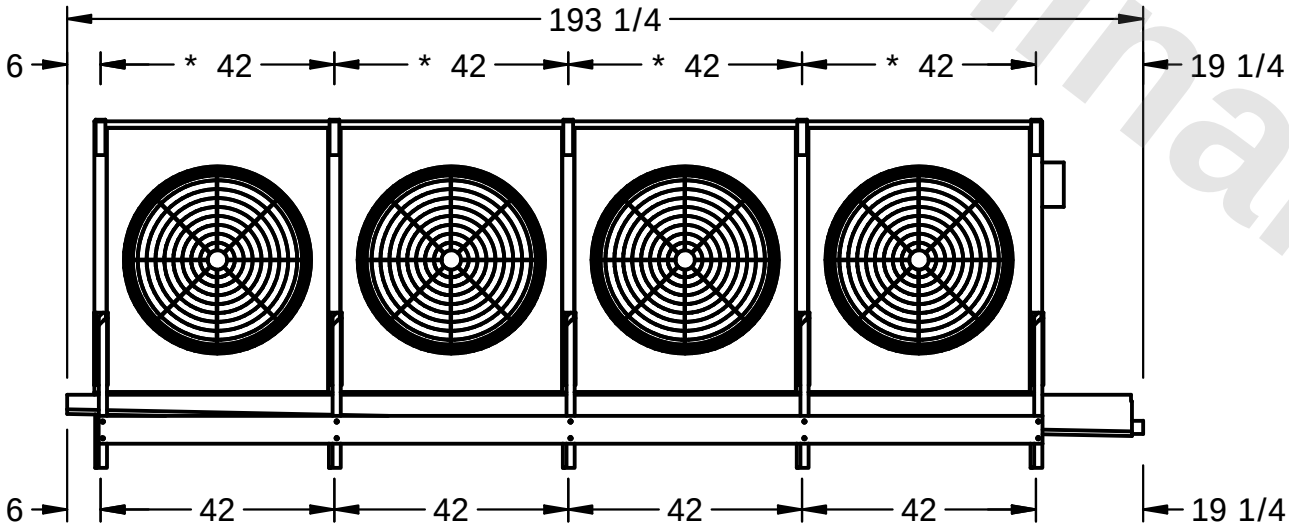

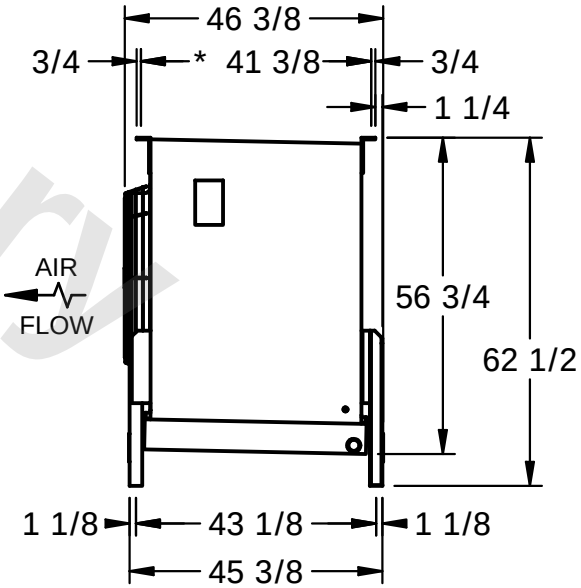

Preliminary

PROJECT	ROOM	SHIPPING WEIGHT	OPERATING WEIGHT
		2480 lbs	3120 lbs