CONFIDENTIAL
This document is the property of Evapco, Inc. It should not be copied or disclosed without prior written authorization.

EVAPCO, INC.

CUSTOMER	MODEL #	SCALE	DWG. #	REV.	DATE
	SSTLB2-5010VE0300K2LA	N.T.S.	STL2-SE-18-10R-FL	1	5/18/2026

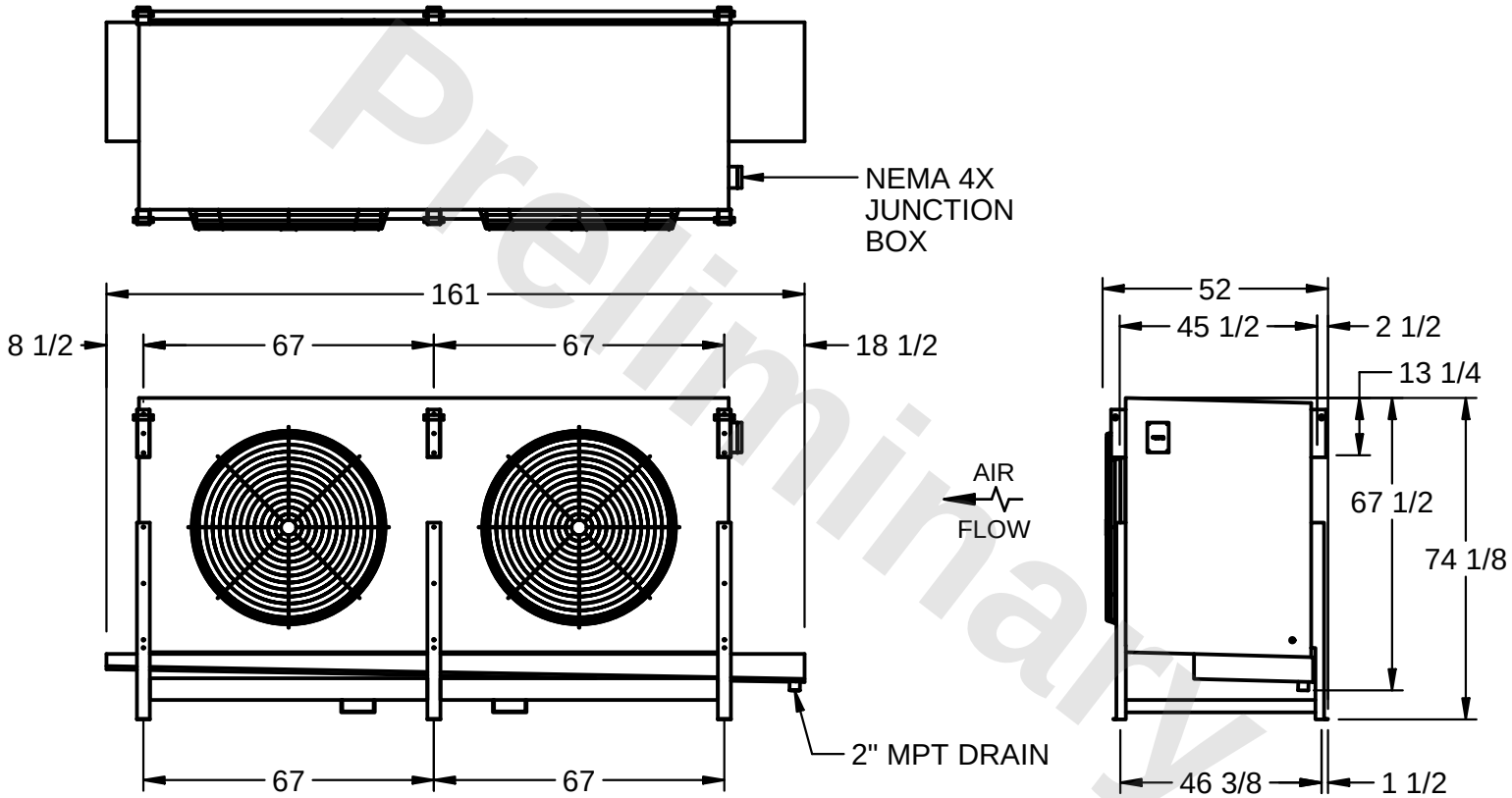

Preliminary

NOTES:

1) RIGHT HAND MODEL SHOWN.

2) ALL DIMENSIONS ARE FOR REFERENCE AND SHOULD NOT BE USED FOR PREFABRICATION OF PIPING OR SUPPORTS.

3) WATER DEFROST ADDS 6 INCHES TO HEIGHT OF STANDARD UNIT AND CHANGES DRAIN SIZE.

4) HANGER HOLES ARE FOR 3/4 INCH THREADED ROD.

PROJECT	ROOM	SHIPPING WEIGHT	OPERATING WEIGHT
		3400 lbs	4130 lbs