CONFIDENTIAL
This document is the property of Evapco, Inc. It should not be copied or disclosed without prior written authorization.

EVAPCO, INC.

CUSTOMER	MODEL #	SCALE	DWG. #	REV.	DATE
	SSTWB4-37S66E0050F3KA	N.T.S.	STWA4-SE-6L	0	10/17/2025

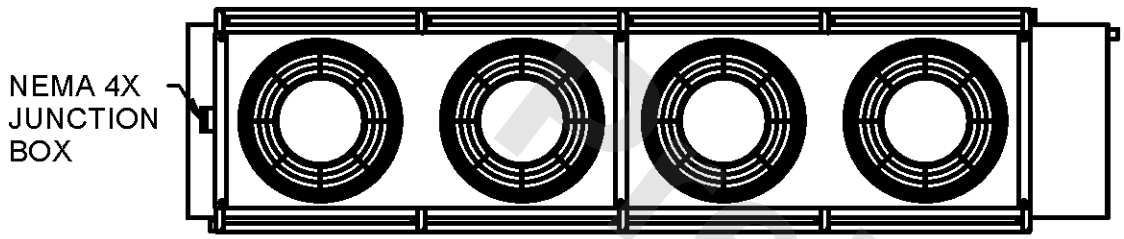

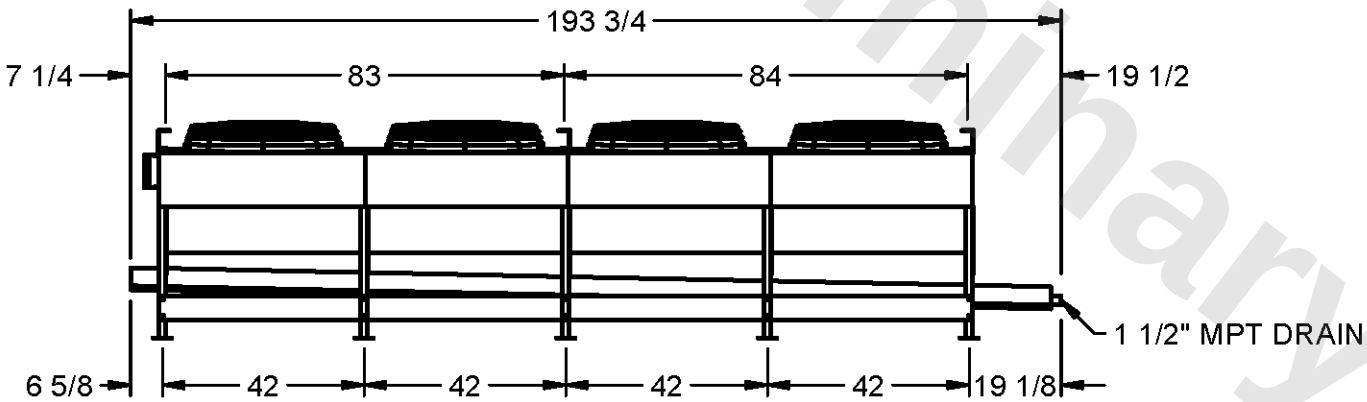

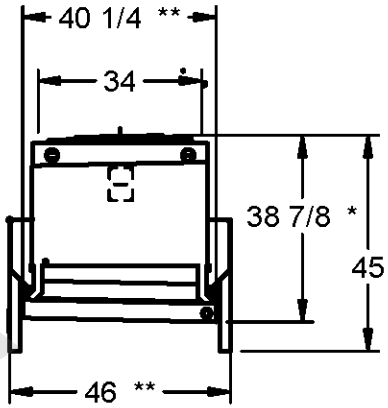

Preliminary

NOTES

1) ALL DIMENSIONS ARE FOR REFERENCE AND SHOULD NOT BE USED FOR PREFABRICATION OF PIPING OR SUPPORTS.
2) HANGER HOLES ARE FOR ¾ INCH THREADED ROD.

* HOT GAS DEFROST ADDS ½ INCH TO THE HEIGHT OF A STANDARD UNIT, WATER DEFROST ADDS 6 INCHES TO THE HEIGHT OF A STANDARD UNIT AND CHANGES THE DRAIN SIZE.

* * EXTENDED WIDTH DRAIN PAN ADDS 6 INCHES TO THE WIDTH OF A STANDARD UNIT.

PROJECT	ROOM	SHIPPING WEIGHT	OPERATING WEIGHT
		2010 lbs+ [915] kg+	2430 lbs+ [1105] kg+