CONFIDENTIAL
This document is the property of Evapco, Inc. It should not be copied or disclosed without prior written authorization.

EVAPCO, INC.

CUSTOMER	MODEL #	SCALE	DWG. #	REV.	DATE
	SSTWB1-9S64F0075F1LA	N.T.S.	STWA1-SE-6L	0	1/22/2026

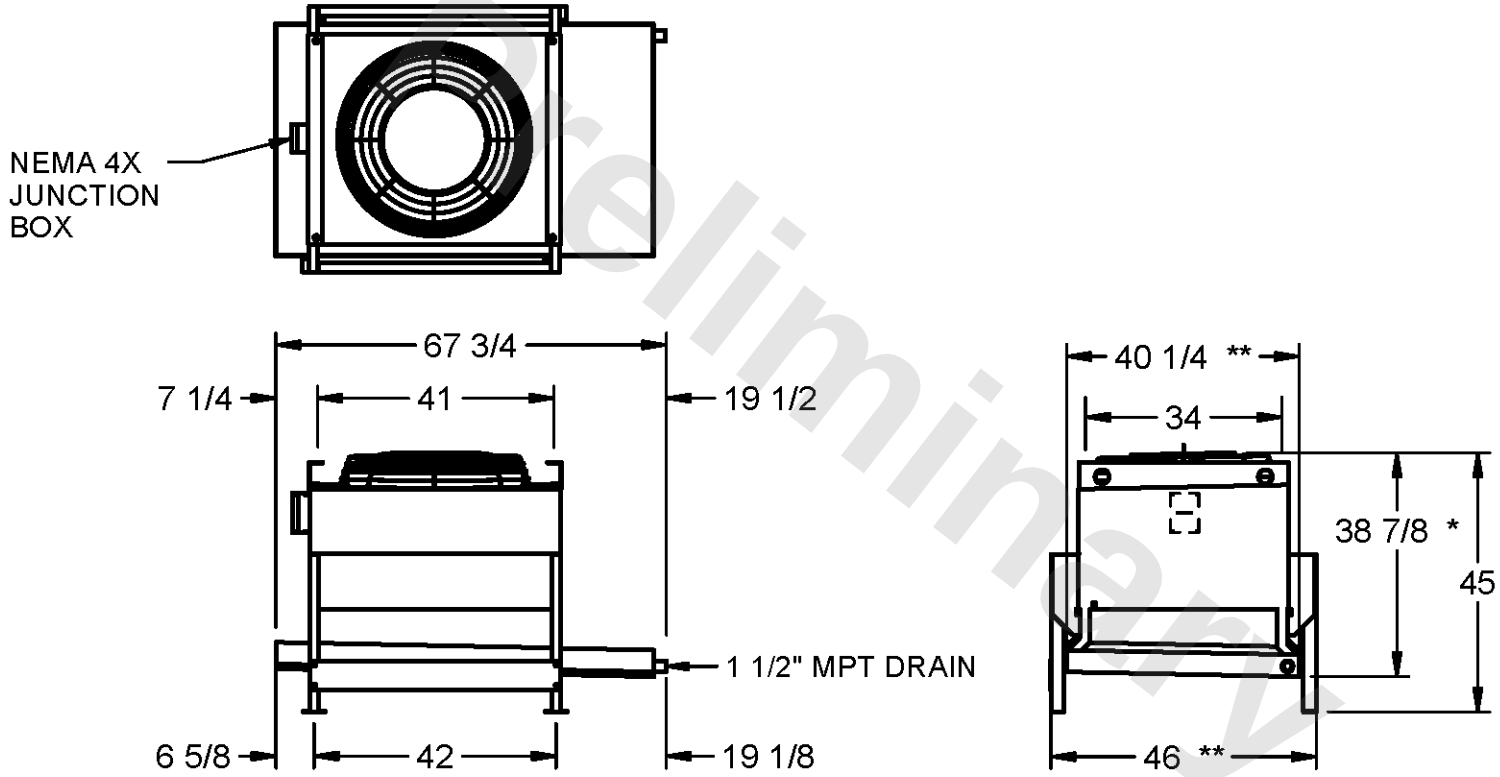

Preliminary

NOTES

1) ALL DIMENSIONS ARE FOR REFERENCE AND SHOULD NOT BE USED FOR PREFABRICATION OF PIPING OR SUPPORTS.
2) HANGER HOLES ARE FOR ¾ INCH THREADED ROD.
* HOT GAS DEFROST ADDS ½ INCH TO THE HEIGHT OF A STANDARD UNIT, WATER DEFROST ADDS 6 INCHES TO THE HEIGHT OF A STANDARD UNIT AND CHANGES THE DRAIN SIZE.
* * EXTENDED WIDTH DRAIN PAN ADDS 6 INCHES TO THE WIDTH OF A STANDARD UNIT.

PROJECT	ROOM	SHIPPING WEIGHT	OPERATING WEIGHT
		530 lbs+ [245] kg+	600 lbs+ [275] kg+