CONFIDENTIAL
This document is the property of Evapco, Inc. It should not be copied or disclosed without prior written authorization.

EVAPCO, INC.

CUSTOMER	MODEL #	SCALE	DWG. #	REV.	DATE
	SSTHB4-1128WE0300K3LA	N.T.S.	STL4-SE-20-FL	1	4/30/2026

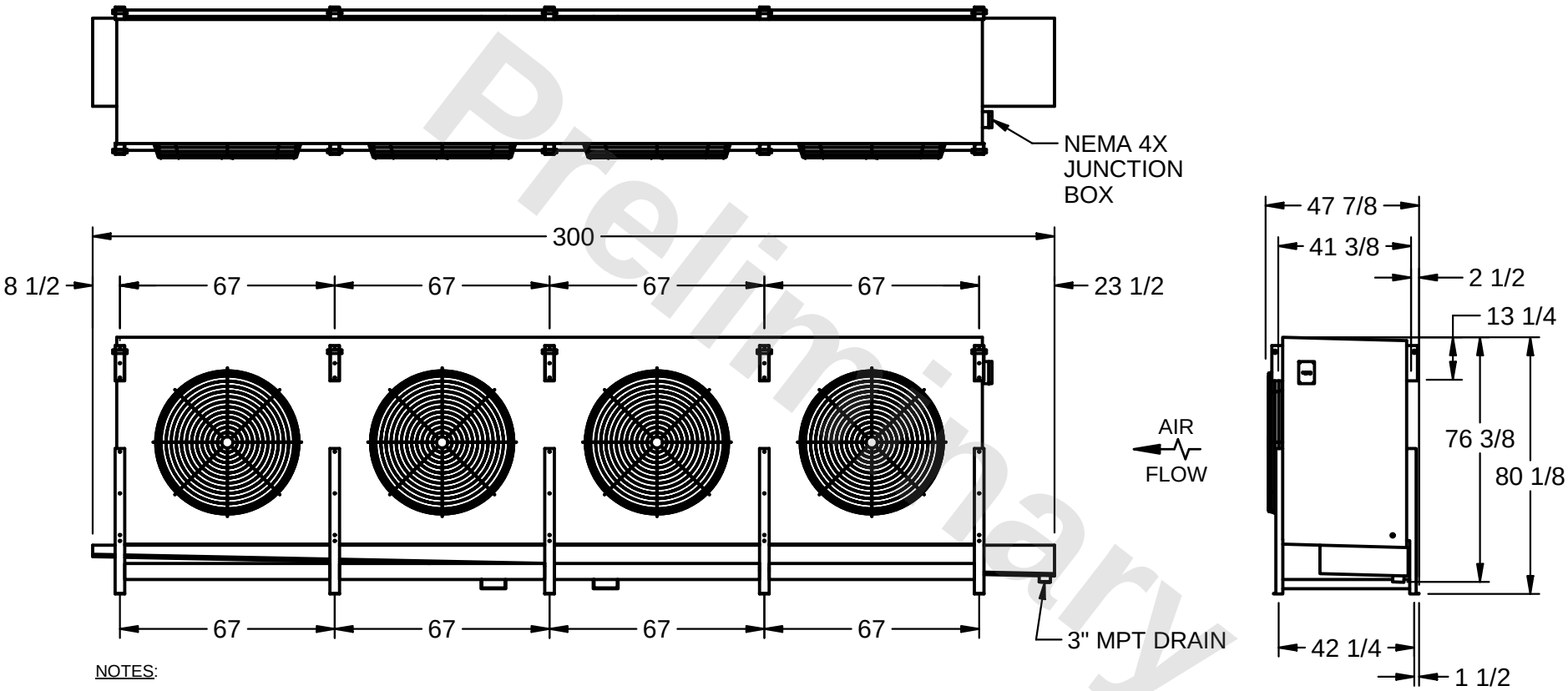

Preliminary

NOTES:

1) RIGHT HAND MODEL SHOWN.

2) ALL DIMENSIONS ARE FOR REFERENCE AND SHOULD NOT BE USED FOR PREFABRICATION OF PIPING OR SUPPORTS.

3) WATER DEFROST ADDS 6 INCHES TO HEIGHT OF STANDARD UNIT AND CHANGES DRAIN SIZE.

4) HANGER HOLES ARE FOR 3/4 INCH THREADED ROD.

PROJECT	ROOM	SHIPPING WEIGHT	OPERATING WEIGHT
		5710 lbs	6880 lbs