UNIT			DWG. #	REV
COOLING TOWER		**EVAPCO, INC.**	ATL4BI48304E5T-DRC-DS	-
MODEL # AT 248-4R30-EV	SCALE NTS		SERIAL #	DATE: 12/13/2025

NOTES
1. (M)- FAN MOTOR LOCATION
2. HEAVIEST SECTION IS CASING SECTION
3. MPT DENOTES MALE PIPE THREAD
   FPT DENOTES FEMALE PIPE THREAD
   BFW DENOTES BEVELED FOR WELDING
   GVD DENOTES GROOVED
   FLG DENOTES FLANGE
4. +UNIT WEIGHT DOES NOT INCLUDE ACCESSORIES (SEE ACCESSORY DRAWINGS)
5. 3/4" [19mm] DIA. MOUNTING HOLES. REFER TO RECOMMENDED STEEL SUPPORT DRAWING
6. DIMENSIONS LISTED AS FOLLOWS
   ENGLISH FT-IN
   [METRIC] [mm]
7. FOR BOTTOM INLET SPECIFICATIONS, SEE DETAIL.

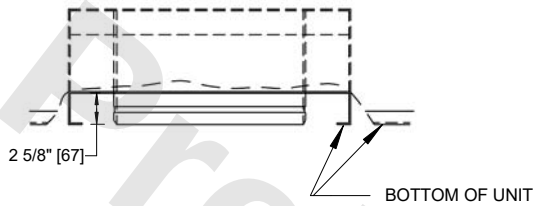

TYPICAL BOTTOM INLET CONNECTION DETAIL

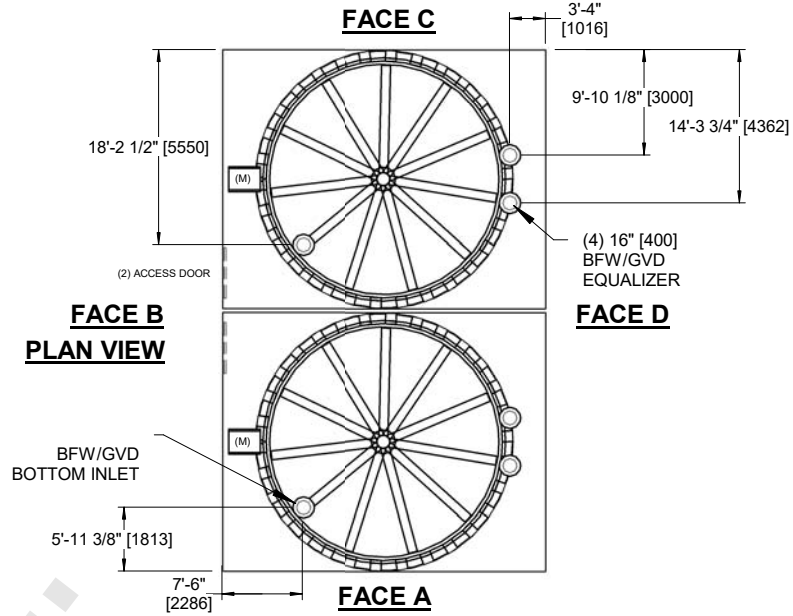

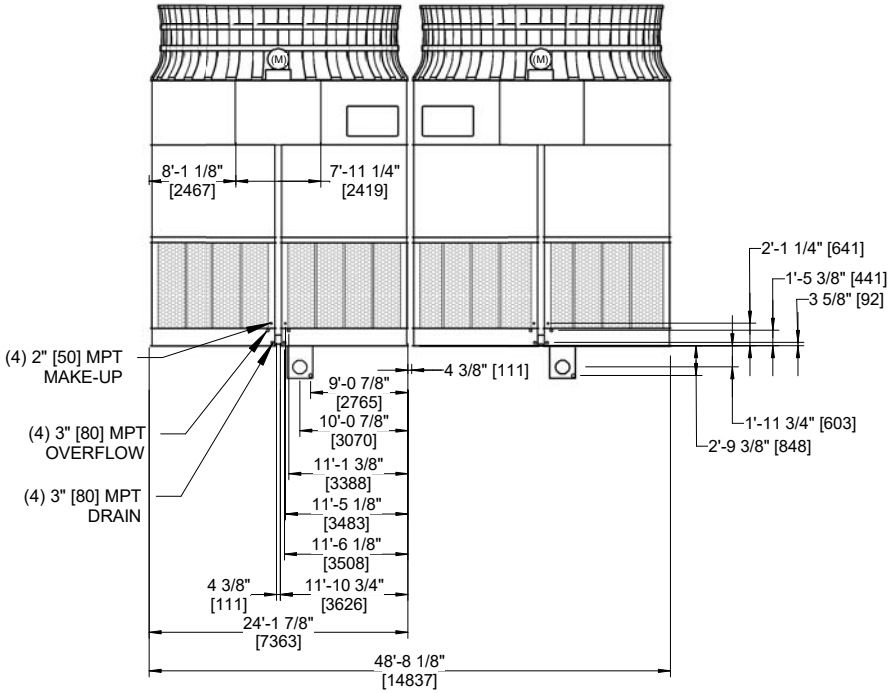

FACE B

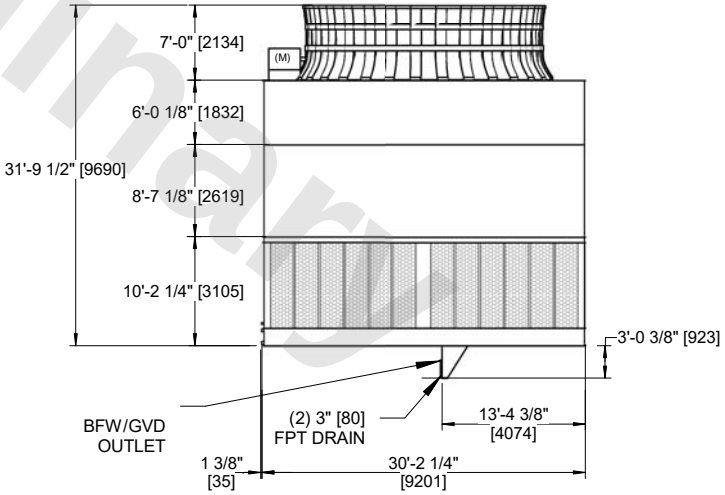

FACE A

Preliminary

SHIPPING WEIGHT	OPERATING WEIGHT	HEAVIEST SECTION WEIGHT	NO. OF SHIPPING SECTIONS	DRAWN BY:
136200 lbs+ [61780] kg+	189260 lbs+ [85850] kg+	12320 lbs+ [5590] kg+	14	JLG