UNIT			DWG. #	REV
CLOSED CIRCUIT COOLER		**EVAPCO, INC.**	WX414224804-DRB-ST	-
MODEL # ESW4 14-42Q22-LP	SCALE NTS		SERIAL #	DATE: 4/28/2026

NOTES:
1. (M)- FAN MOTOR LOCATION
2. HEAVIEST SECTION IS COIL SECTION
3. MPT DENOTES MALE PIPE THREAD
   FPT DENOTES FEMALE PIPE THREAD
   BFW DENOTES BEVELED FOR WELDING
   GVD DENOTES GROOVED
   FLG DENOTES FLANGE
4. +UNIT WEIGHT DOES NOT INCLUDE ACCESSORIES (SEE ACCESSORY DRAWINGS)
5. 3/4" [19MM] DIA. MOUNTING HOLES. REFER TO RECOMMENDED STEEL SUPPORT DRAWING
6. MAKE-UP WATER PRESSURE 20 psi MIN [137 kPa], 50 psi MAX [344 kPa]
7. DIMENSIONS LISTED AS FOLLOWS:
   ENGLISH FT-IN
   [METRIC] [mm]
8. * - APPROXIMATE DIMENSIONS DO NOT USE FOR PRE-FABRICATION OF CONNECTING PIPING

Preliminary

FACE C

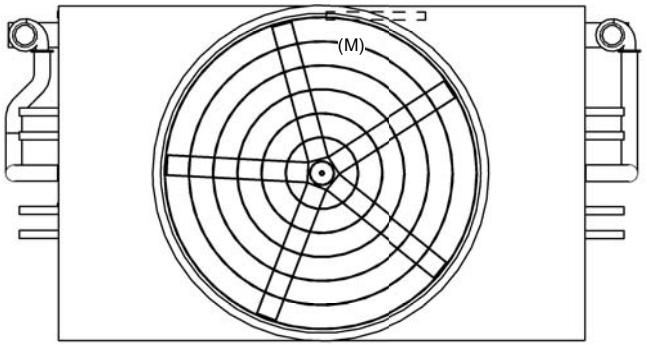

FACE B
PLAN VIEW

FACE D

FACE A

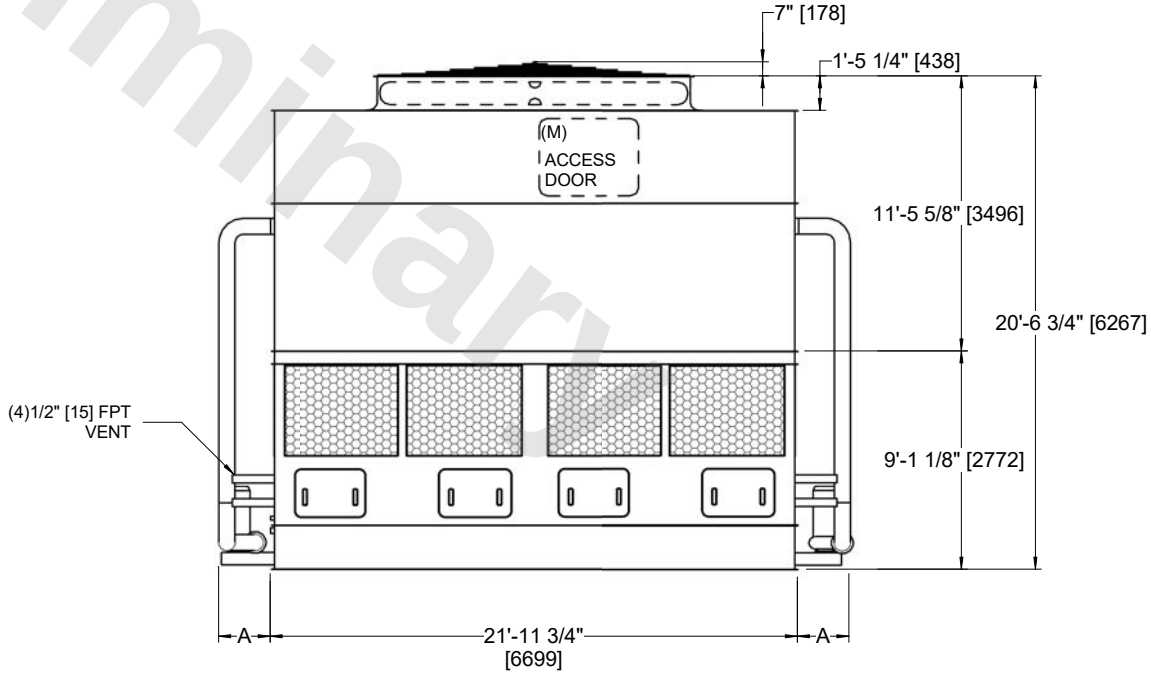

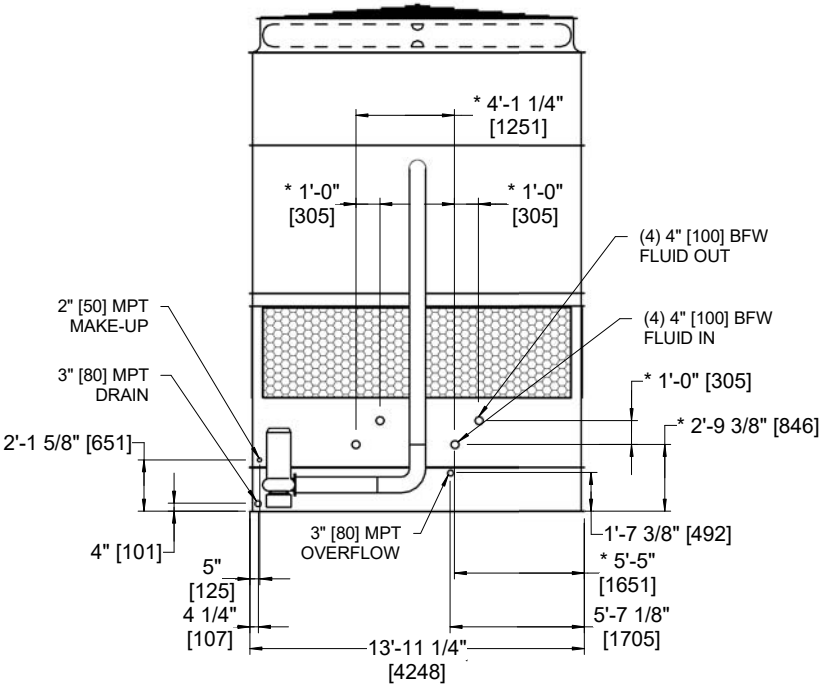

FACE B

FACE A

MODEL NUMBER	DIMENSION A
ESW4 14-42*22-LP	2'-1 3/4"
ESW4 14-42*22-AP	2'-7 1/4"

SHIPPING WEIGHT	OPERATING WEIGHT	HEAVIEST SECTION WEIGHT	NO. OF SHIPPING SECTIONS	DRAWN BY:
33400 lbs+ [15150] kg+	49890 lbs+ [22630] kg+	19240 lbs+ [8730] kg+	2	JLG