UNIT	CONDENSER		EVAPCO, INC.	DWG. #	C4242412-DRA-ST	REV	-
MODEL #	ATC-2114E	SCALE	NTS	SERIAL #		DATE:	5/16/2026

NOTES
1. (M)- FAN MOTOR LOCATION
2. MPT DENOTES MALE PIPE THREAD
   FPT DENOTES FEMALE PIPE THREAD
   BFW DENOTES BEVELED FOR WELDING
   GVD DENOTES GROOVED
   FLG DENOTES FLANGE
   PE DENOTES PLAIN END
3. +UNIT WEIGHT DOES NOT INCLUDE ACCESSORIES (SEE ACCESSORY DRAWINGS)
4. MAKE-UP WATER PRESSURE 20 psi MIN [137 kPa], 50 psi MAX [344 kPa]
5. *-APPROXIMATE DIMENSIONS DO NOT USE FOR PRE-FABRICATION OF CONNECTING PIPING
6. 3/4" [19mm] DIA. MOUNTING HOLES. REFER TO RECOMMENDED STEEL SUPPORT DRAWING.
7. DIMENSIONS LISTED AS FOLLOWS:
   ENGLISH FT-IN
   METRIC [mm]

Preliminary

FACE C

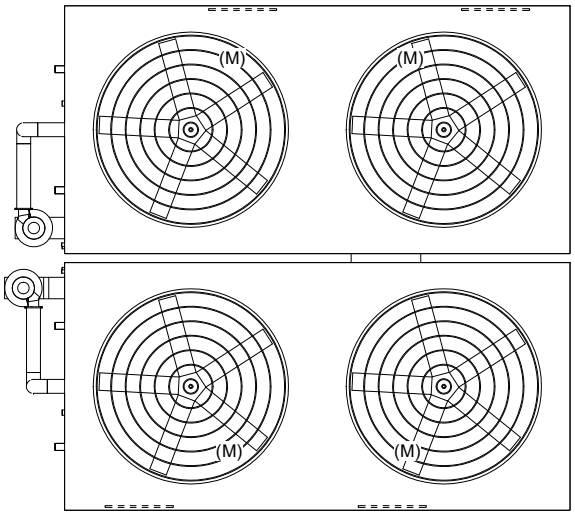

FACE B
PLAN VIEW

FACE D

FACE A

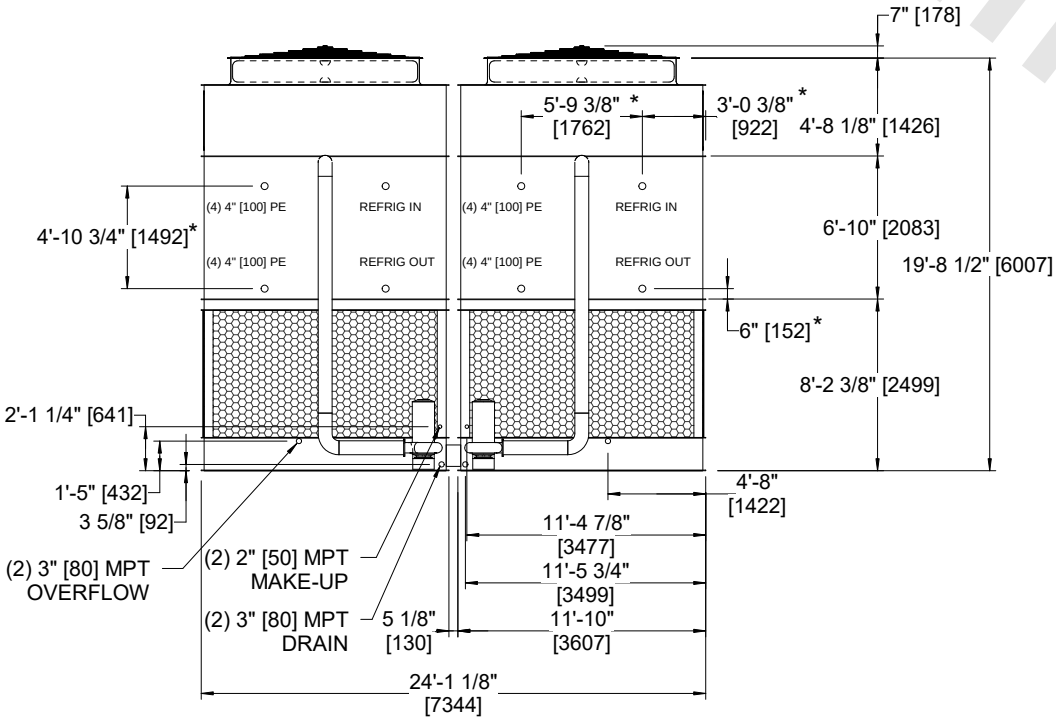

FACE B

(4) ACCESS DOOR

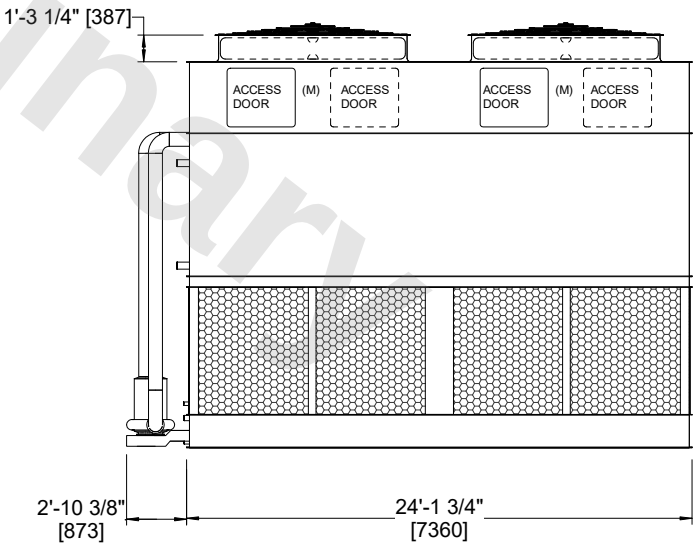

FACE A

SHIPPING WEIGHT	86980 lbs+ [39455] kg+	OPERATING WEIGHT	113460 lbs+ [51465] kg+	HEAVIEST SECTION WEIGHT	36670 lbs+ [16635] kg+	NO. OF SHIPPING SECTIONS	4	DRAWN BY:	JLG