UNIT	COOLING TOWER			DWG. #	T4281848-DRA-ST	REV	-
MODEL #	AT 228-4P18	SCALE	NTS	SERIAL #		DATE:	4/9/2026

EVAPCO, INC.

NOTES:
1. (M)- FAN MOTOR LOCATION
2. HEAVIEST SECTION IS FAN/CASING SECTION
3. MPT DENOTES MALE PIPE THREAD
   FPT DENOTES FEMALE PIPE THREAD
   BFW DENOTES BEVELED FOR WELDING
   GVD DENOTES GROOVED
   FLG DENOTES FLANGE
4. +UNIT WEIGHT DOES NOT INCLUDE ACCESSORIES (SEE ACCESSORY DRAWINGS)
5. 3/4" [19MM] DIA. MOUNTING HOLES. REFER TO RECOMMENDED STEEL SUPPORT DRAWING
6. DIMENSIONS LISTED AS FOLLOWS:
   ENGLISH FT-IN
   [METRIC] [mm]
7. MAKE-UP WATER PRESSURE 20 psi MIN [137 kPa], 50 psi MAX [344 kPa]

Preliminary

FACE C

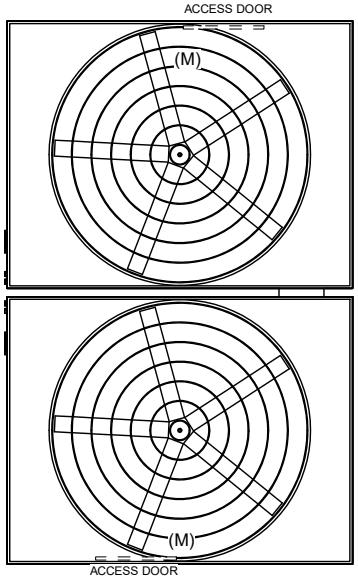

FACE B **FACE D**

PLAN VIEW

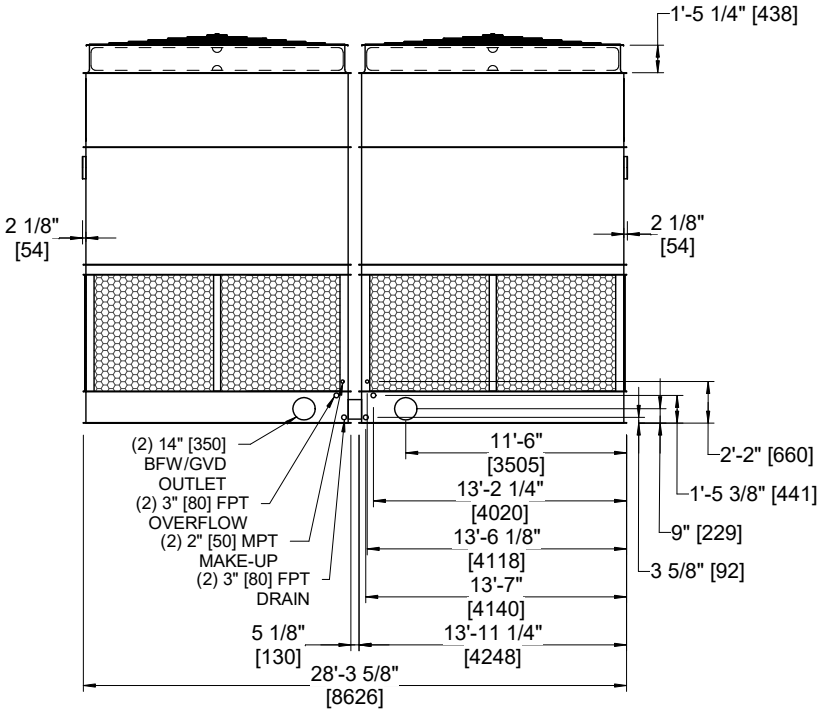

FACE B

FACE A

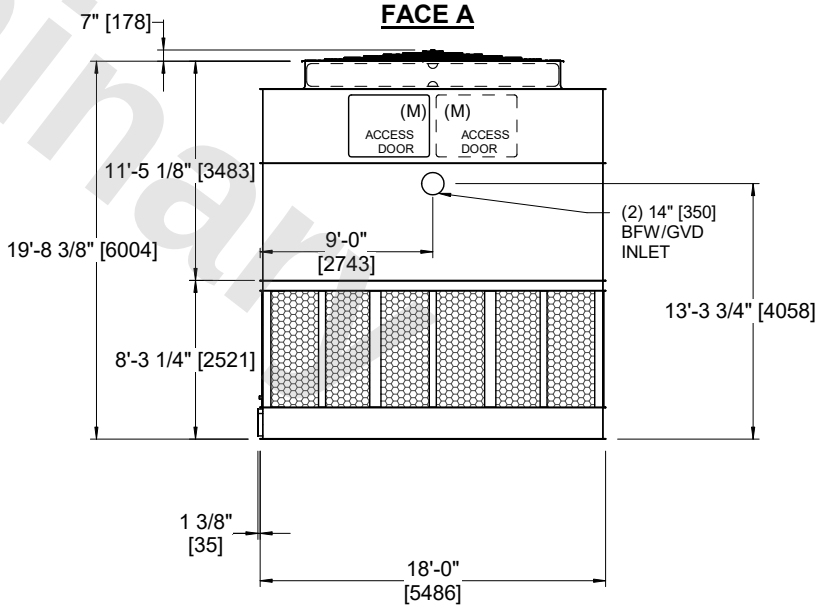

FACE A

SHIPPING WEIGHT	35920 lbs+ [16295] kg+	OPERATING WEIGHT	55340 lbs+ [25105] kg+	HEAVIEST SECTION WEIGHT	12890 lbs+ [5850] kg+	NO. OF SHIPPING SECTIONS	4	DRAWN BY:	TRS