CONFIDENTIAL
This document is the property of Evapco, Inc. It should not be copied or disclosed without prior written authorization.

CUSTOMER	MODEL #	SCALE	DWG. #	REV.	DATE
	U-SSTWE3-28S46F0050F3KA	N.T.S.	USSTW3-SE-8	0	5/17/2026

AIR FLOW DIAGRAM

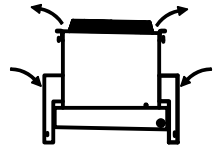

NOTES:
1) * = HANGER HOLE LOCATION.
2) HANGER HOLES ARE FOR 3/4 INCH THREADED ROD.
3) ALL DIMENSIONS ARE FOR REFERENCE AND SHOULD NOT BE USED FOR PREFABRICATION OF PIPING OR SUPPORTS.

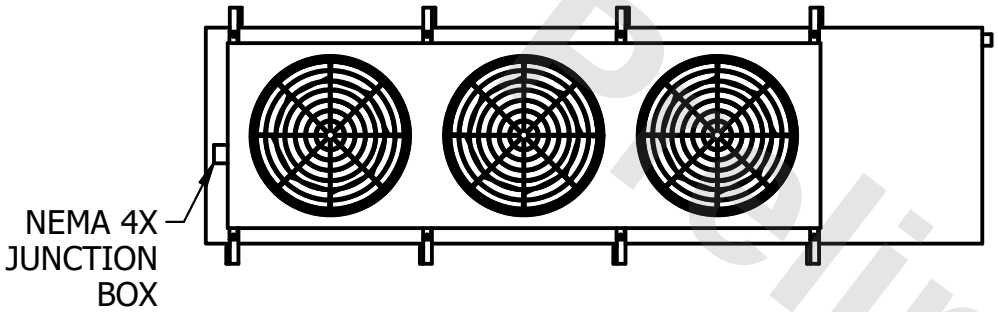

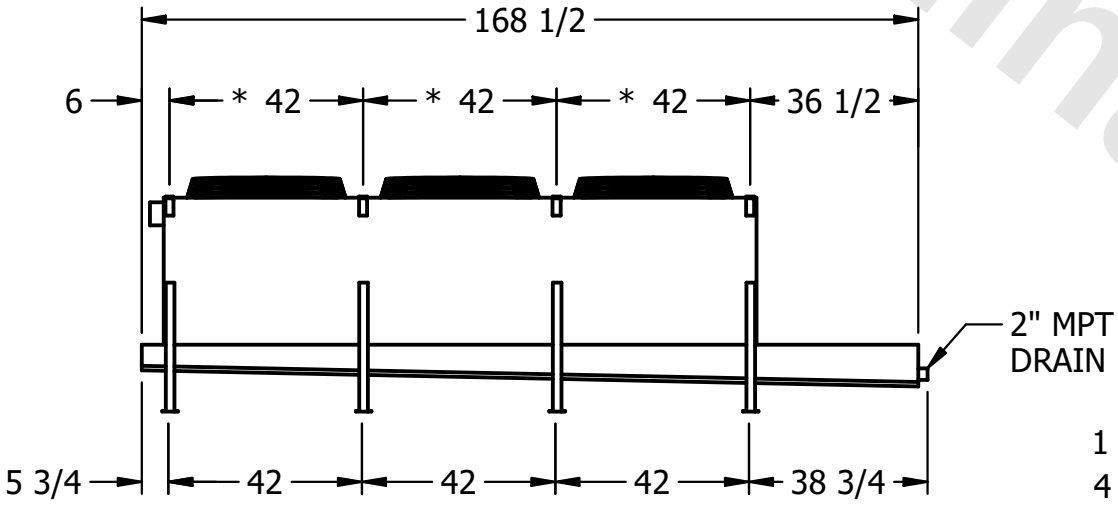

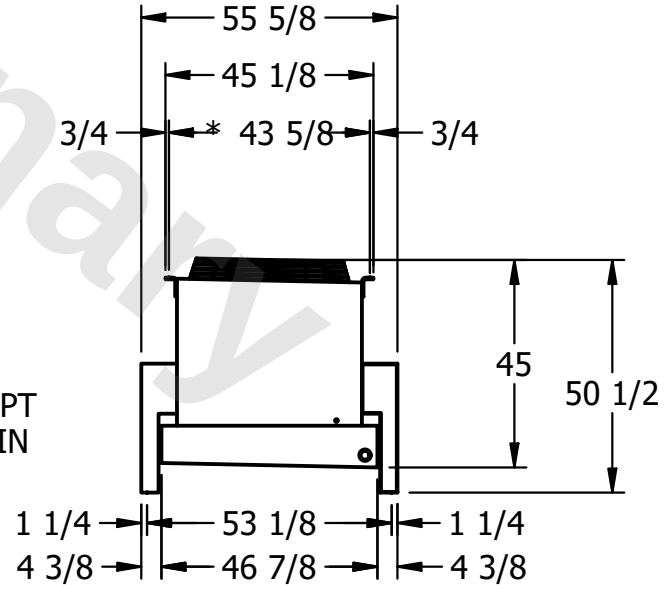

Preliminary

PROJECT	ROOM	SHIPPING WEIGHT	OPERATING WEIGHT
		1280 lbs+ [585] kg+	1450 lbs+ [660] kg+