CONFIDENTIAL
This document is the property of Evapco, Inc. It should not be copied or disclosed without prior written authorization.

CUSTOMER	MODEL #	SCALE	DWG. #	REV.	DATE
	U-SSTME1-986H0150F1LA	N.T.S.	USSTM1-SE-16,18	0	6/5/2026

Preliminary

NOTES:
1) * = HANGER HOLE LOCATION.
2) RIGHT HAND MODEL SHOWN.
3) HANGER HOLES ARE FOR 3/4 INCH THREADED ROD.
4) ALL DIMENSIONS ARE FOR REFERENCE AND SHOULD NOT BE USED FOR PREFABRICATION OF PIPING OR SUPPORTS.

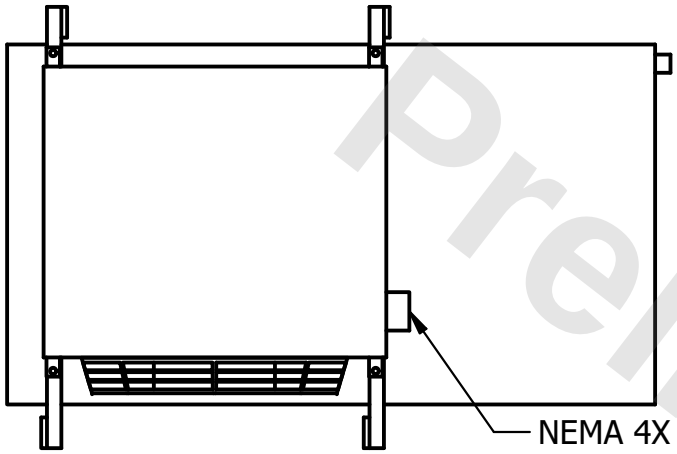

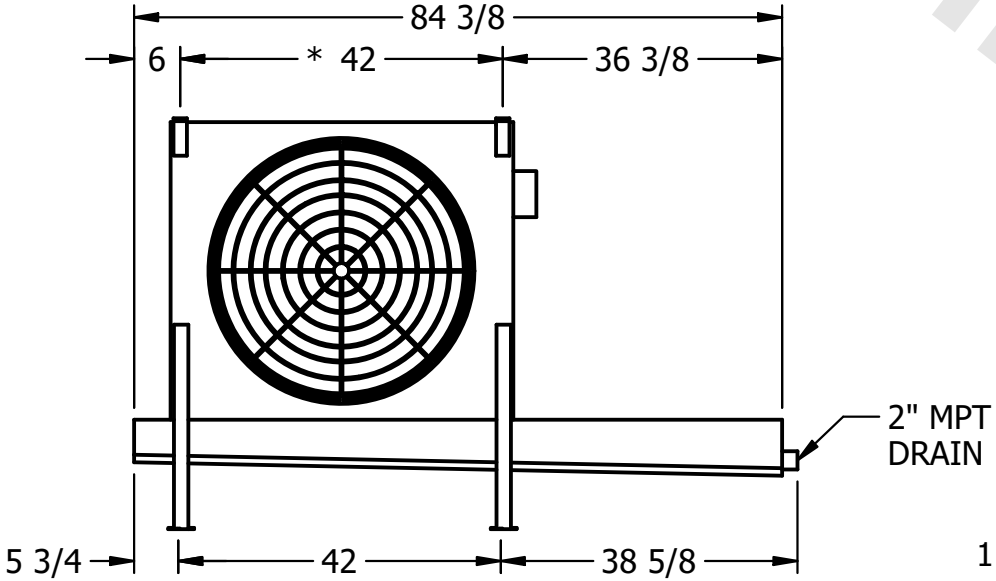

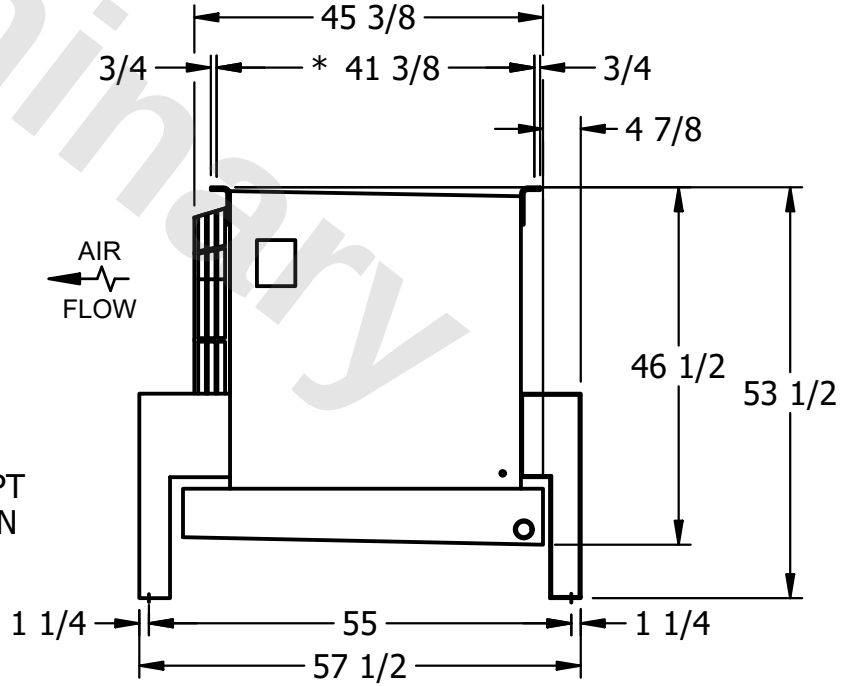

PROJECT	ROOM	SHIPPING WEIGHT	OPERATING WEIGHT
		790 lbs+ [360] kg+	910 lbs+ [415] kg+