# EVAPCO, INC.

| UNIT | MODEL # | SCALE | DWG. # | REV. | DATE | SERIAL # |
|---|---|---|---|---|---|---|
| EVAPORATIVE CONDENSER | ATC-DC-1214M-35-2EF | N.T.S. | EGCH121404-DRC-ST | - | 4/29/2026 | |

NOTES:
1. (M)- FAN MOTOR LOCATION
2. HEAVIEST SECTION IS COIL SECTION
3. MPT DENOTES MALE PIPE THREAD
   FPT DENOTES FEMALE PIPE THREAD
   BFW DENOTES BEVELED FOR WELDING
   GVD DENOTES GROOVED
   FLG DENOTES FLANGE
4. +UNIT WEIGHT DOES NOT INCLUDE ACCESSORIES (SEE ACCESSORY DRAWINGS)
5. MAKE-UP WATER PRESSURE 20 psi MIN [137 kPa], 50 psi MAX [344 kPa]
6. 3/4" [19mm] DIA. MOUNTING HOLES. REFER TO RECOMMENDED STEEL SUPPORT DRAWING.
7. * - APPROXIMATE DIMENSIONS DO NOT USE FOR PRE-FABRICATION OF CONNECTING PIPING.

Preliminary

**FACE 2**
**PLAN VIEW**

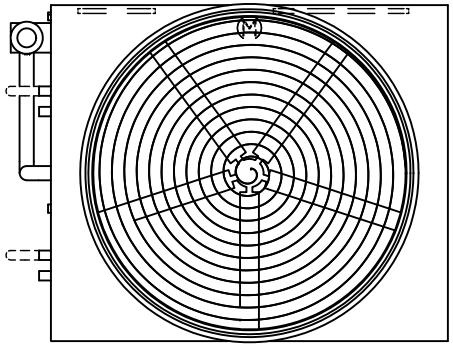


**FACE 1**

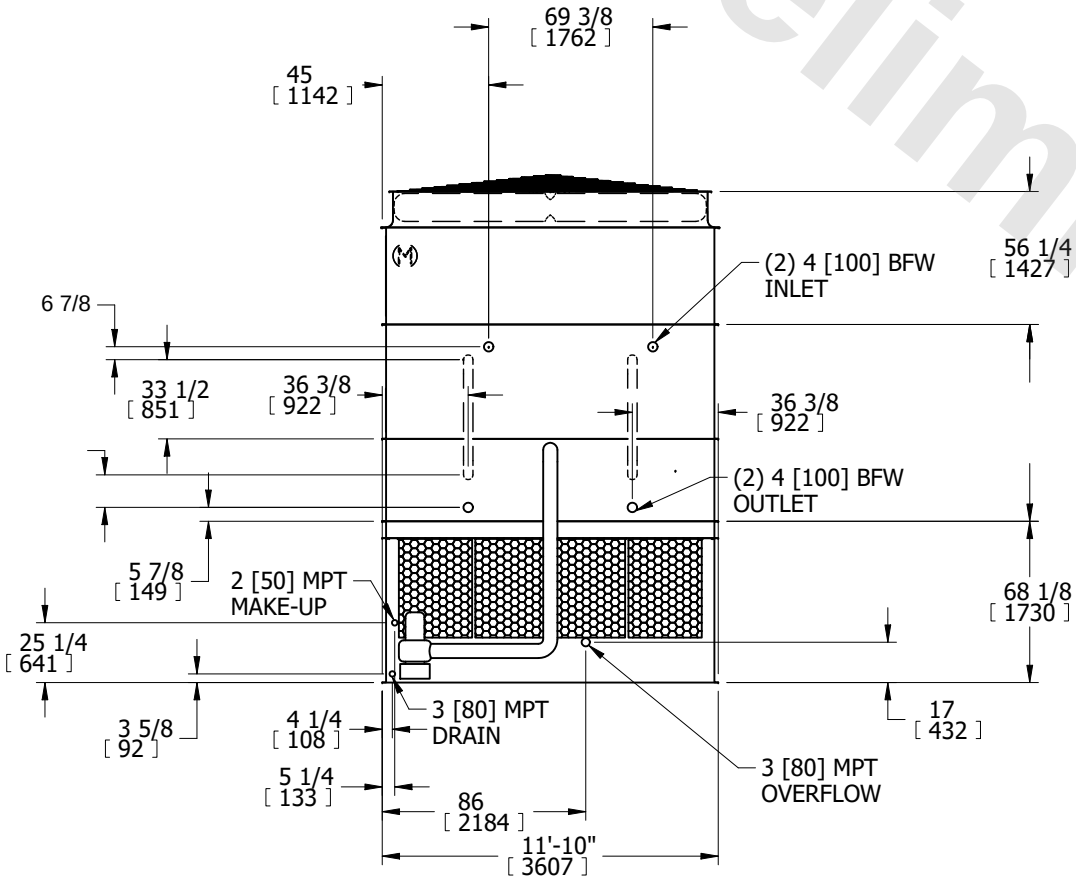


**FACE 2**

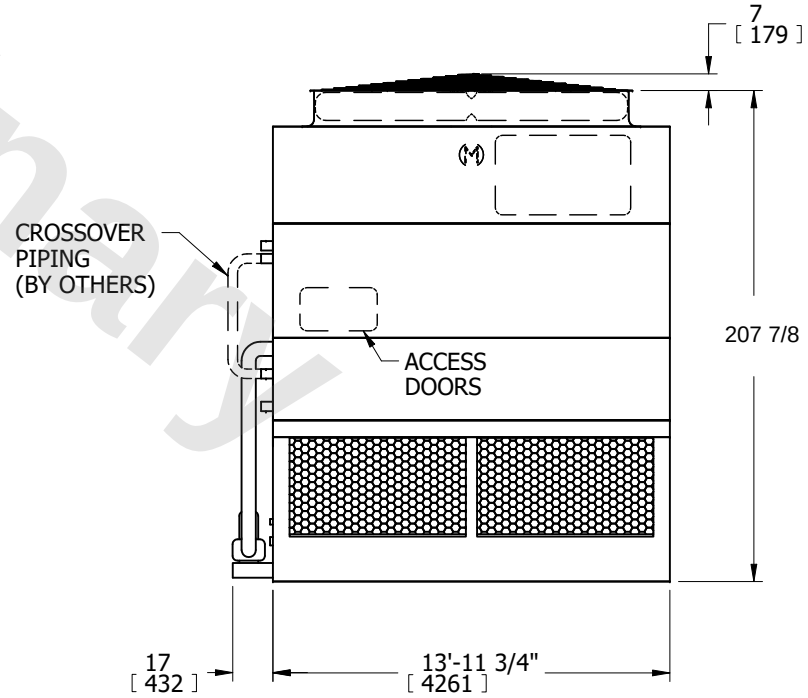


**FACE 1**

| SHIPPING WEIGHT | OPERATING WEIGHT | HEAVIEST SECTION WEIGHT | NO. OF SHIPPING SECTIONS | DRAWN BY: |
|---|---|---|---|---|
| 24730 lbs+ [11220] kg+ | 32280 lbs+ [14645] kg+ | 18470 lbs+ [8380] kg+ | 3 | SFR |