EVAPCO, INC.

UNIT	MODEL #	SCALE	DWG. #	REV.	DATE	SERIAL #
EVAPORATIVE CONDENSER	ATC-DC-1214M-25-2EF	N.T.S.	EGCH121404-DRC-ST	-	6/20/2026	

NOTES:
1. (M)- FAN MOTOR LOCATION
2. HEAVIEST SECTION IS COIL SECTION
3. MPT DENOTES MALE PIPE THREAD
   FPT DENOTES FEMALE PIPE THREAD
   BFW DENOTES BEVELED FOR WELDING
   GVD DENOTES GROOVED
   FLG DENOTES FLANGE
4. +UNIT WEIGHT DOES NOT INCLUDE ACCESSORIES (SEE ACCESSORY DRAWINGS)
5. MAKE-UP WATER PRESSURE 20 psi MIN [137 kPa], 50 psi MAX [344 kPa]
6. 3/4" [19mm] DIA. MOUNTING HOLES. REFER TO RECOMMENDED STEEL SUPPORT DRAWING.
7. * - APPROXIMATE DIMENSIONS DO NOT USE FOR PRE-FABRICATION OF CONNECTING PIPING.

Preliminary

FACE 2
PLAN VIEW

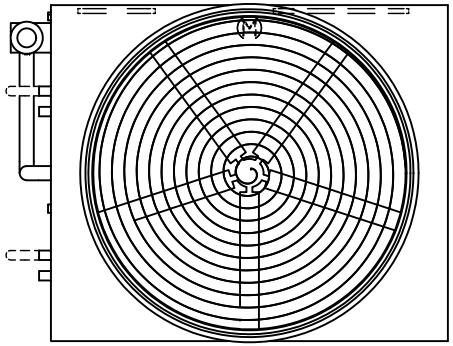

FACE 1

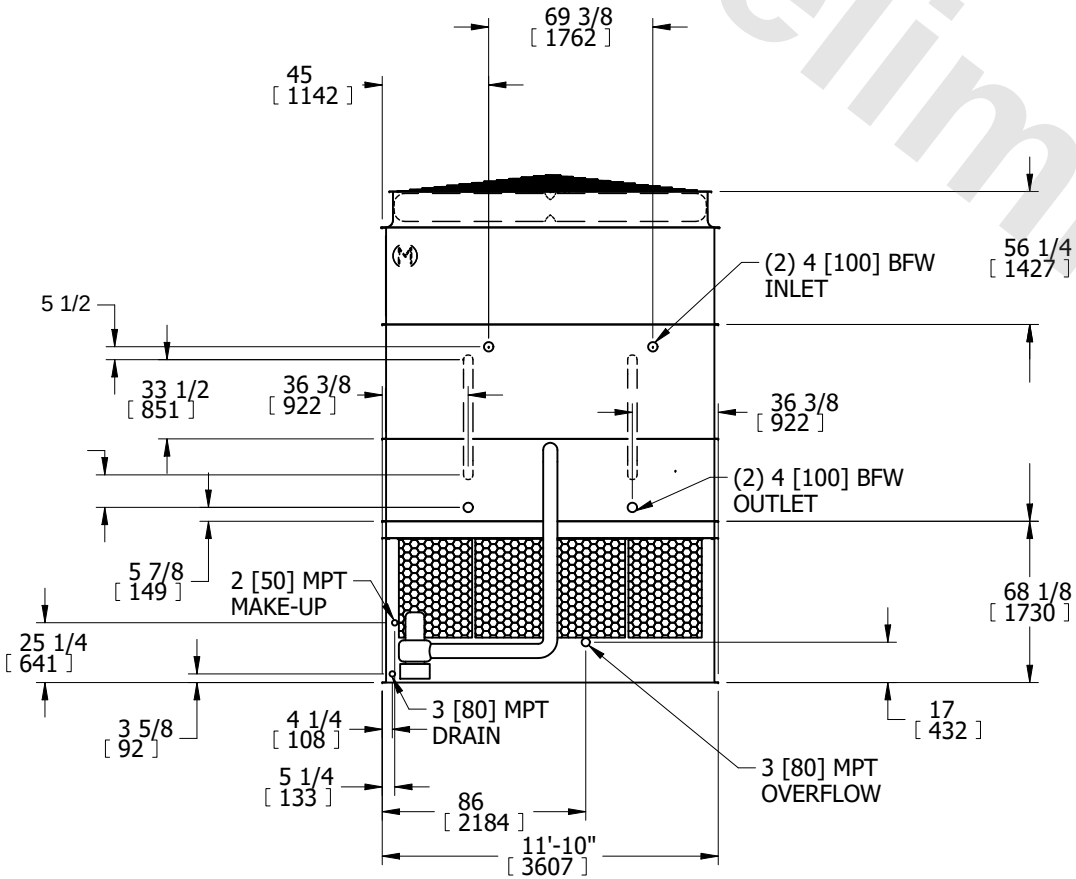

FACE 2

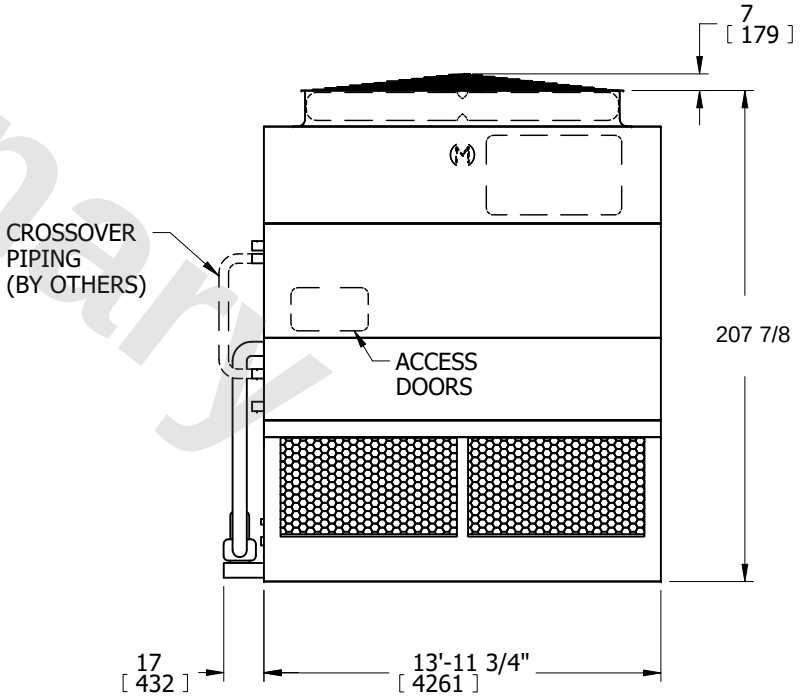

FACE 1

SHIPPING WEIGHT	OPERATING WEIGHT	HEAVIEST SECTION WEIGHT	NO. OF SHIPPING SECTIONS	DRAWN BY:
22660 lbs+ [10280] kg+	29970 lbs+ [13595] kg+	16400 lbs+ [7440] kg+	3	SFR