UNIT	COOLING TOWER			DWG. #	T4147860-DRA-ST	REV.	-
MODEL #	AT 314-5O78	SCALE	NTS	SERIAL #		DATE	6/30/2026

EVAPCO, INC.

NOTES:
1. (M)- FAN MOTOR LOCATION
2. HEAVIEST SECTION IS UPPER SECTION
3. MPT DENOTES MALE PIPE THREAD
   FPT DENOTES FEMALE PIPE THREAD
   BFW DENOTES BEVELED FOR WELDING
   GVD DENOTES GROOVED
   FLG DENOTES FLANGE
   PE DENOTES PLAIN END
4. +UNIT WEIGHT DOES NOT INCLUDE ACCESSORIES (SEE ACCESSORY DRAWINGS)
5. MAKE-UP WATER PRESSURE 20 psi MIN [137 kPa], 50 psi MAX [344 kPa]
6. 3/4" [19MM] DIA. MOUNTING HOLES. REFER TO RECOMMENDED STEEL SUPPORT DRAWING
7. DIMENSIONS LISTED AS FOLLOWS:
   ENGLISH FT-IN
   [METRIC] [mm]

Preliminary

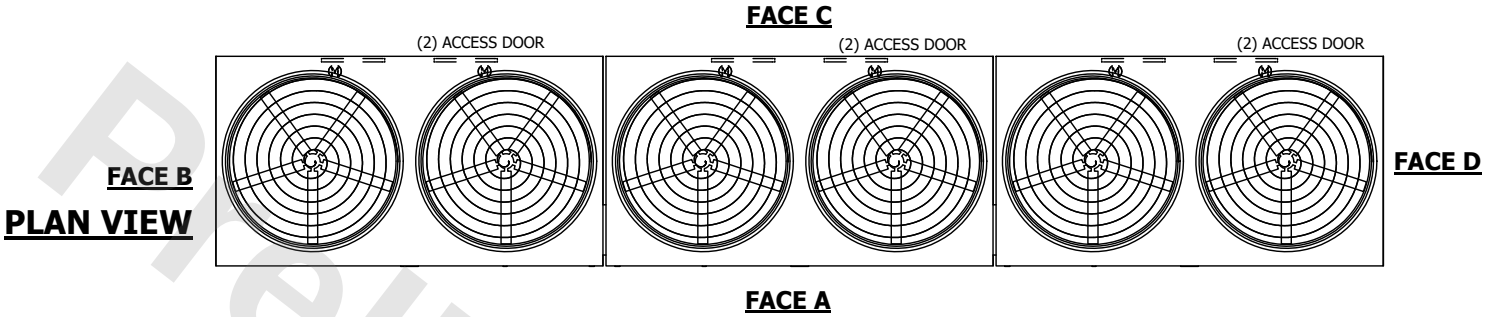

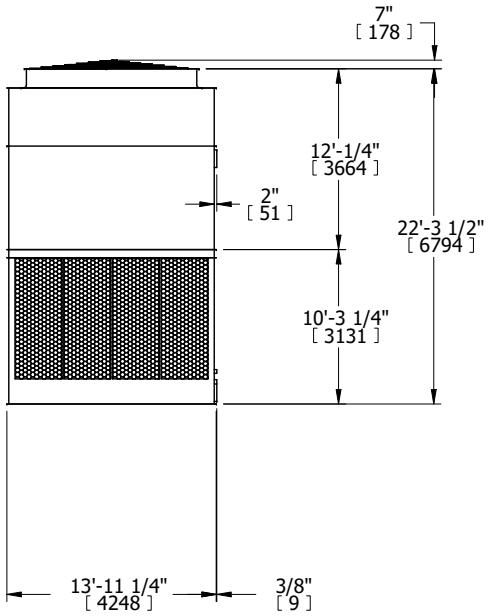

FACE B

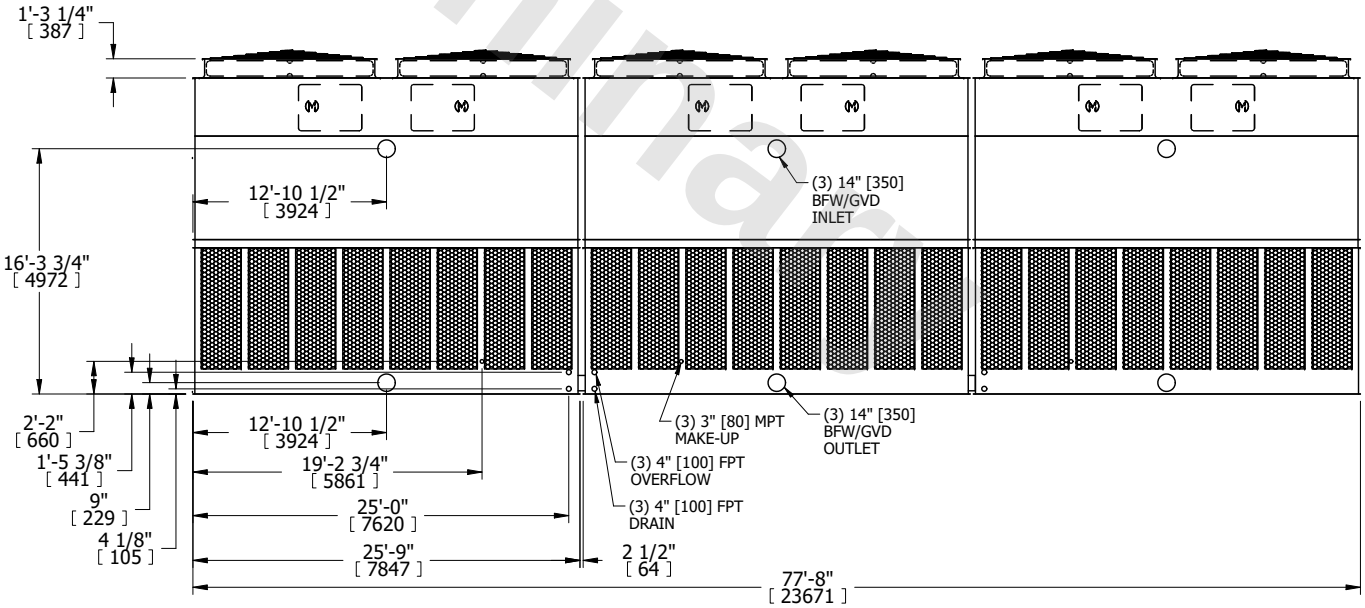

FACE A

SHIPPING WEIGHT	75120 lbs+ [34075] kg+	OPERATING WEIGHT	125040 lbs+ [56720] kg+	HEAVIEST SECTION WEIGHT	18160 lbs+ [8240] kg+	NO. OF SHIPPING SECTIONS	6	DRAWN BY:	MER