| UNIT | COOLING TOWER | | EVAPCO, INC. | DWG. # | T3170936-DRG-ST | REV. | - |
|---|---|---|---|---|---|---|---|
| MODEL # | AT 217-3H9 | SCALE NTS | | SERIAL # | | DATE | 4/18/2026 |

NOTES:
1. (M)- FAN MOTOR LOCATION
2. HEAVIEST SECTION IS UPPER SECTION
3. MPT DENOTES MALE PIPE THREAD
   FPT DENOTES FEMALE PIPE THREAD
   BFW DENOTES BEVELED FOR WELDING
   GVD DENOTES GROOVED
   FLG DENOTES FLANGE
4. +UNIT WEIGHT DOES NOT INCLUDE ACCESSORIES (SEE ACCESSORY DRAWINGS)
5. MAKE-UP WATER PRESSURE
   20 psi MIN [137 kPa], 50 psi MAX [344 kPa]
6. 3/4" [19MM] DIA. MOUNTING HOLES.
   REFER TO RECOMMENDED STEEL SUPPORT DRAWING
7. DIMENSIONS LISTED AS FOLLOWS:
   ENGLISH FT-IN
   [METRIC] [mm]

Preliminary

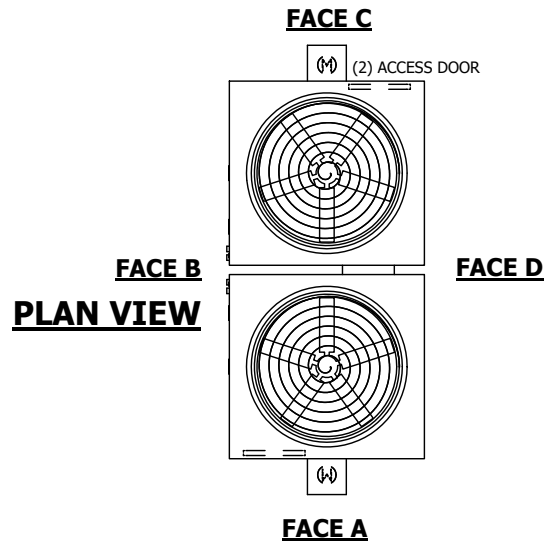


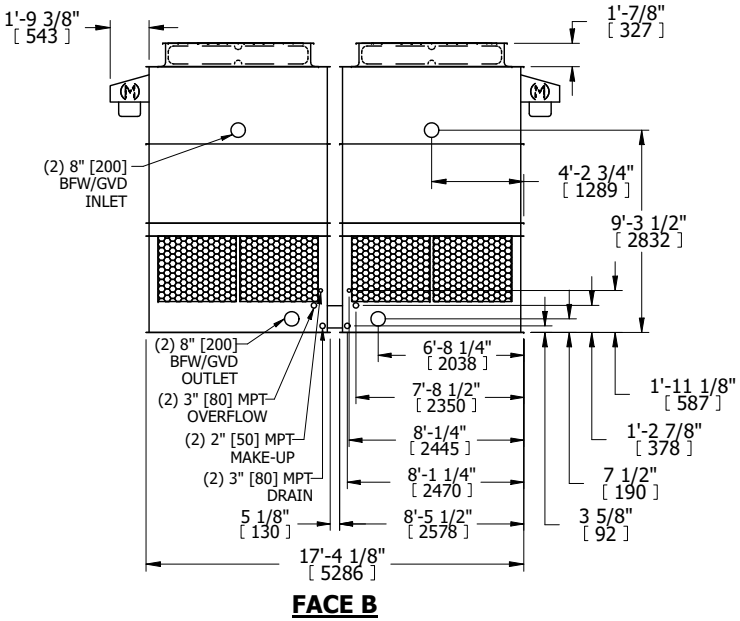


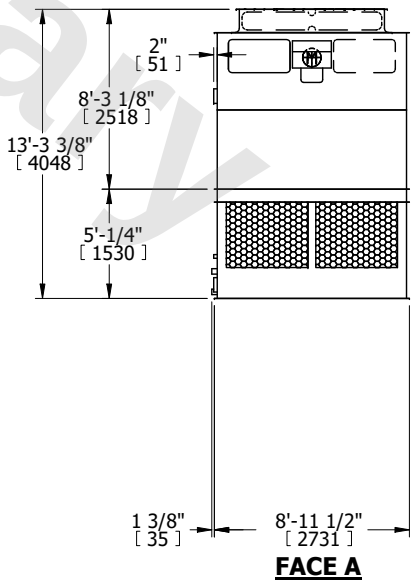


| SHIPPING WEIGHT | 9040 lbs+ [4105] kg+ | OPERATING WEIGHT | 14720 lbs+ [6680] kg+ | HEAVIEST SECTION WEIGHT | 2980 lbs+ [1355] kg+ | NO. OF SHIPPING SECTIONS | 4 | DRAWN BY: | KDS |
|---|---|---|---|---|---|---|---|---|---|