UNIT	COOLING TOWER			DWG. #	T3121248-DRD-ST	REV.	-
MODEL #	AT 112-4I12	SCALE	NTS	SERIAL #		DATE	2/6/2026

EVAPCO, INC.

NOTES:
1. (M)- FAN MOTOR LOCATION
2. HEAVIEST SECTION IS UPPER SECTION
3. MPT DENOTES MALE PIPE THREAD
   FPT DENOTES FEMALE PIPE THREAD
   BFW DENOTES BEVELED FOR WELDING
   GVD DENOTES GROOVED
   FLG DENOTES FLANGE
4. +UNIT WEIGHT DOES NOT INCLUDE ACCESSORIES (SEE ACCESSORY DRAWINGS)
5. MAKE-UP WATER PRESSURE 20 psi MIN [137 kPa], 50 psi MAX [344 kPa]
6. 3/4" [19MM] DIA. MOUNTING HOLES. REFER TO RECOMMENDED STEEL SUPPORT DRAWING
7. DIMENSIONS LISTED AS FOLLOWS:
   ENGLISH FT-IN
   [METRIC] [mm]

Preliminary

FACE C

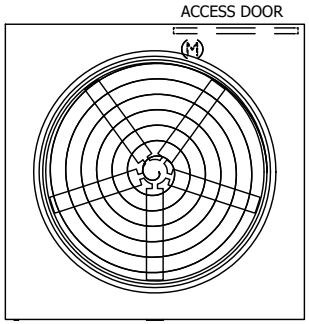

FACE B **FACE D**

PLAN VIEW

FACE A

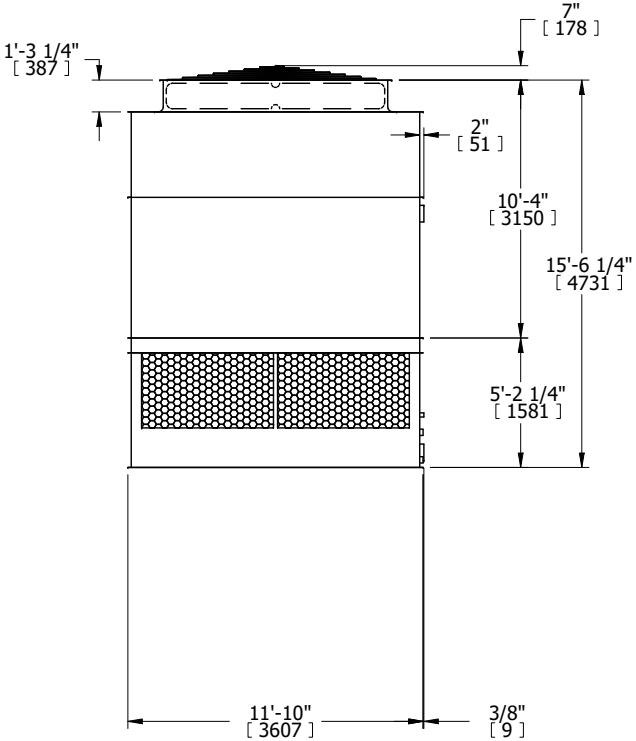

FACE B

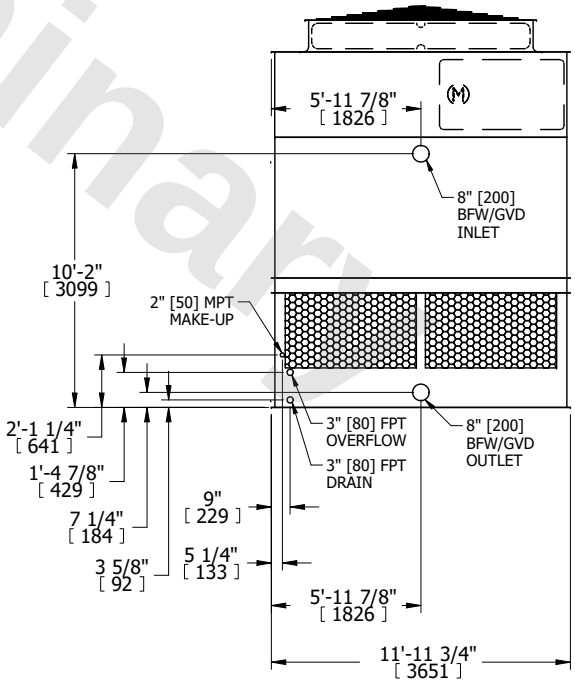

FACE A

SHIPPING WEIGHT	8360 lbs+ [3795] kg+	OPERATING WEIGHT	14570 lbs+ [6610] kg+	HEAVIEST SECTION WEIGHT	5960 lbs+ [2705] kg+	NO. OF SHIPPING SECTIONS	2	DRAWN BY:	KDS