UNIT	CLOSED CIRCUIT COOLER		EVAPCO, INC.	DWG. # WLE040606-DRD-SF	REV. -
MODEL # LSWE 4-3G6-Z		SCALE NTS		SERIAL #	DATE 7/10/2025

NOTES:
1. (M)- FAN MOTOR LOCATION
2. MPT DENOTES MALE PIPE THREAD
   FPT DENOTES FEMALE PIPE THREAD
   BFW DENOTES BEVELED FOR WELDING
   GVD DENOTES GROOVED
   FLG DENOTES FLANGE
   PE DENOTES PLAIN END
3. +UNIT WEIGHT DOES NOT INCLUDE ACCESSORIES (SEE ACCESSORY DRAWINGS)
4. 3/4" [19mm] DIA. MOUNTING HOLES. REFER TO RECOMMENDED STEEL SUPPORT DRAWING
5. DIMENSIONS LISTED AS FOLLOWS: ENGLISH FT IN [METRIC] [mm]
6. * - APPROXIMATE DIMENSIONS DO NOT USE FOR PRE-FABRICATION OF CONNECTING PIPING
7. HEAVIEST SECTION IS COIL SECTION
8. MAKE-UP WATER PRESSURE 20 psi [137 kPa] MIN, 50 psi [344 kPa] MAX
9. MAKE-UP CONNECTION LOCATED 7-5/8" [194] FROM CONNECTION END OF UNIT
10. SERIES FLOW PIPING AND AUX. CROSSOVER DRAIN ARE BY OTHERS

Preliminary

FACE C

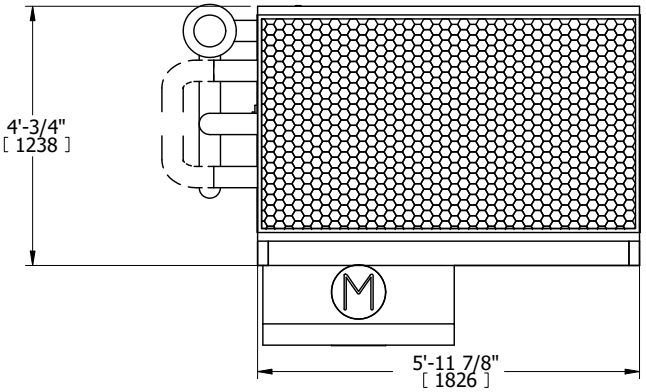

FACE A

FACE B

FACE D

PLAN VIEW

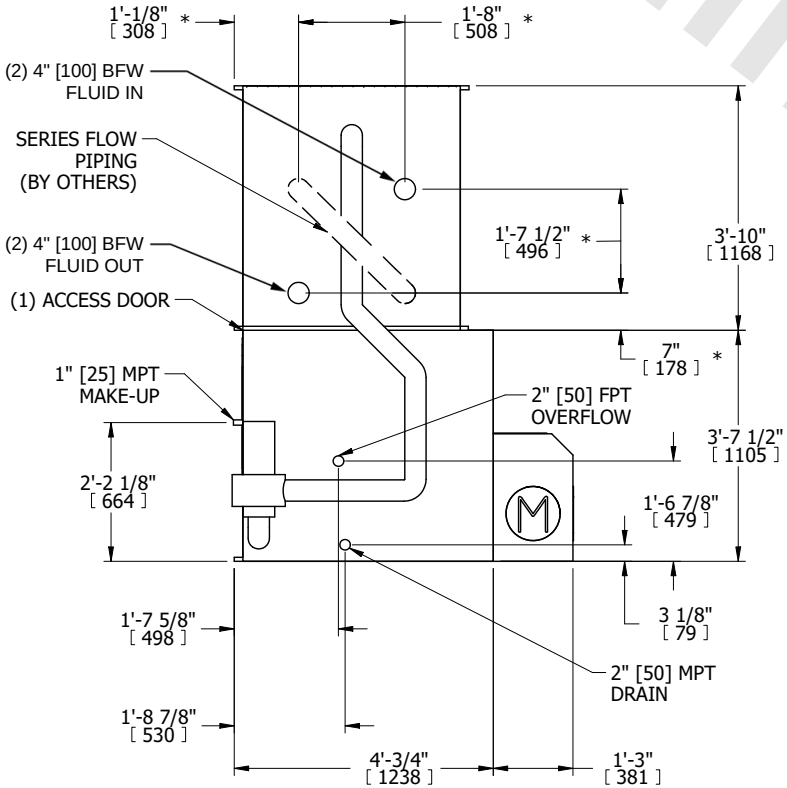

FACE B

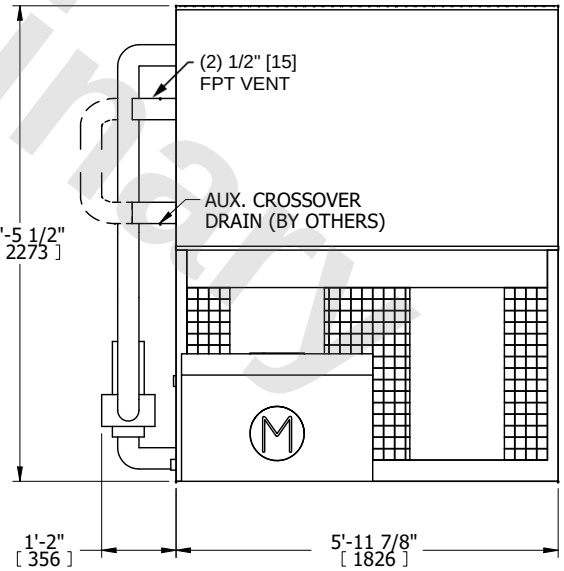

FACE A

SHIPPING WEIGHT	2730 lbs+ [1240] kg+	OPERATING WEIGHT	3780 lbs+ [1715] kg+	HEAVIEST SECTION WEIGHT	1590 lbs+ [725] kg+	NO. OF SHIPPING SECTIONS	2	DRAWN BY:	TLS