UNIT	CLOSED CIRCUIT COOLER		EVAPCO, INC.	DWG. #	WLETM2414-DRD-ST	REV.	-
MODEL #	LSWE 10-7P24	SCALE	NTS	SERIAL #		DATE	4/3/2026

NOTES:
1. (M)- FAN MOTOR LOCATION
2. HEAVIEST SECTION IS COIL SECTION
3. MPT DENOTES MALE PIPE THREAD
   FPT DENOTES FEMALE PIPE THREAD
   BFW DENOTES BEVELED FOR WELDING
   GVD DENOTES GROOVED
   FLG DENOTES FLANGE
   PE DENOTES PLAIN END
4. +UNIT WEIGHT DOES NOT INCLUDE ACCESSORIES (SEE ACCESSORY DRAWINGS)
5. 3/4" [19mm] DIA. MOUNTING HOLES. REFER TO RECOMMENDED STEEL SUPPORT DRAWING
6. DIMENSIONS LISTED AS FOLLOWS: ENGLISH FT IN [METRIC] [mm]
7. * - APPROXIMATE DIMENSIONS DO NOT USE FOR PRE-FABRICATION OF CONNECTING PIPING
8. MAKE-UP WATER PRESSURE 20 psi [137 kPa] MIN, 50 psi [344 kPa] MAX

Preliminary

FACE C

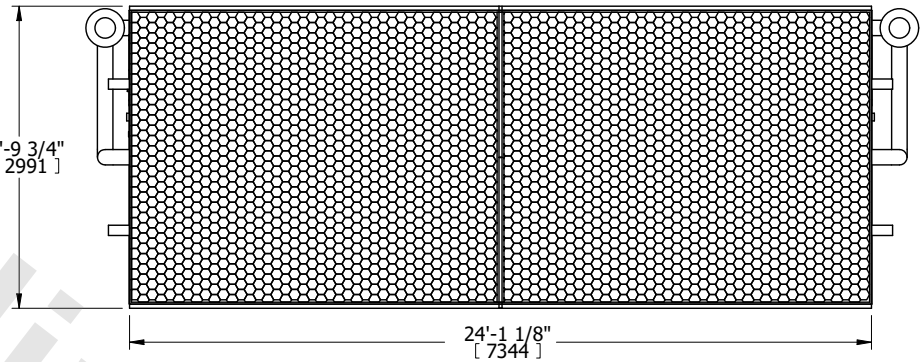

FACE B **FACE D**

FACE A

PLAN VIEW

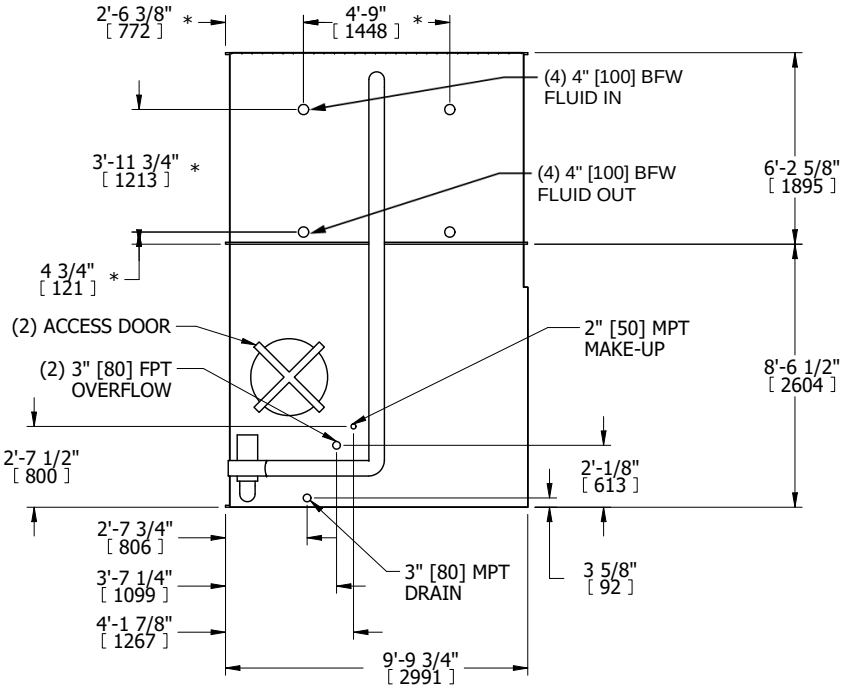

FACE B

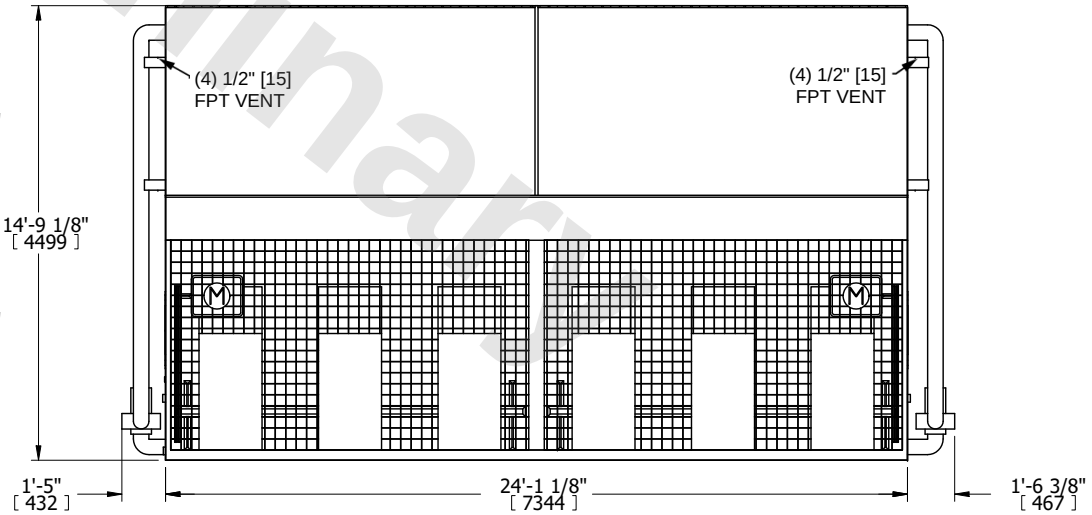

FACE A

SHIPPING WEIGHT	43060 lbs+ [19535] kg+	OPERATING WEIGHT	61420 lbs+ [27860] kg+	HEAVIEST SECTION WEIGHT	15750 lbs+ [7145] kg+	NO. OF SHIPPING SECTIONS	3	DRAWN BY:	TLS