UNIT	CLOSED CIRCUIT COOLER			DWG. #	WB3092106-DRC-SF	REV.	-
MODEL #	eco-ATWB 9-3H21-Z	SCALE	NTS	SERIAL #		DATE	2/4/2026

EVAPCO, INC.

NOTES:
1. (M) - FAN MOTOR LOCATION
2. HEAVIEST SECTION IS UPPER SECTION
3. MPT DENOTES MALE PIPE THREAD
   FPT DENOTES FEMALE PIPE THREAD
   BFW DENOTES BEVELED FOR WELDING
   GVD DENOTES GROOVED
   FLG DENOTES FLANGE
   PE DENOTES PLAIN END
4. + UNIT WEIGHT DOES NOT INCLUDE ACCESSORIES (SEE SEPARATE DRAWINGS FOR ACCESSORIES)
5. MAKE-UP WATER PRESSURE 20 psi MIN [137 kPa], 50 psi MAX [344 kPa]
6. * - APPROXIMATE DIMENSIONS DO NOT USE FOR PRE-FABRICATION OF CONNECTING PIPING
7. SERIES FLOW PIPING AND AUX. CROSSOVER DRAIN BY OTHERS
8. 3/4" [19MM] DIA. MOUNTING HOLES. REFER TO RECOMMENDED STEEL SUPPORT DRAWING.
9. DIMENSIONS LISTED AS FOLLOWS:
   ENGLISH FT-IN
   METRIC [mm]

Preliminary

FACE C

FACE B

PLAN VIEW

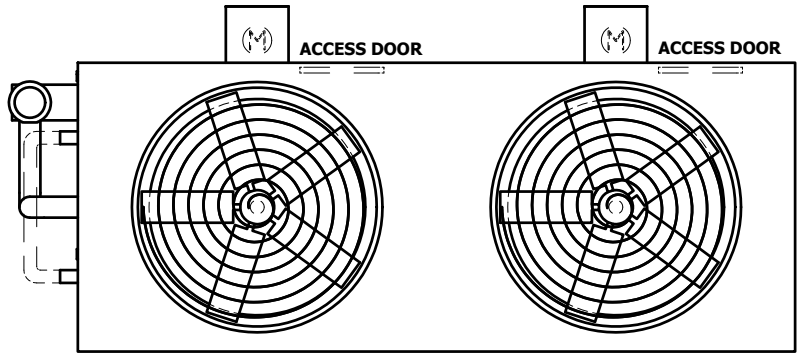

FACE D

FACE A

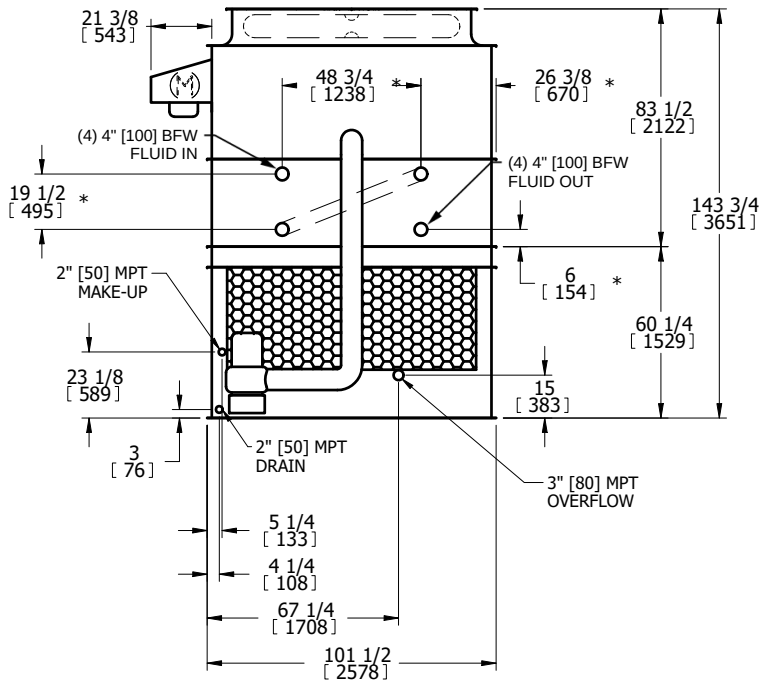

FACE B

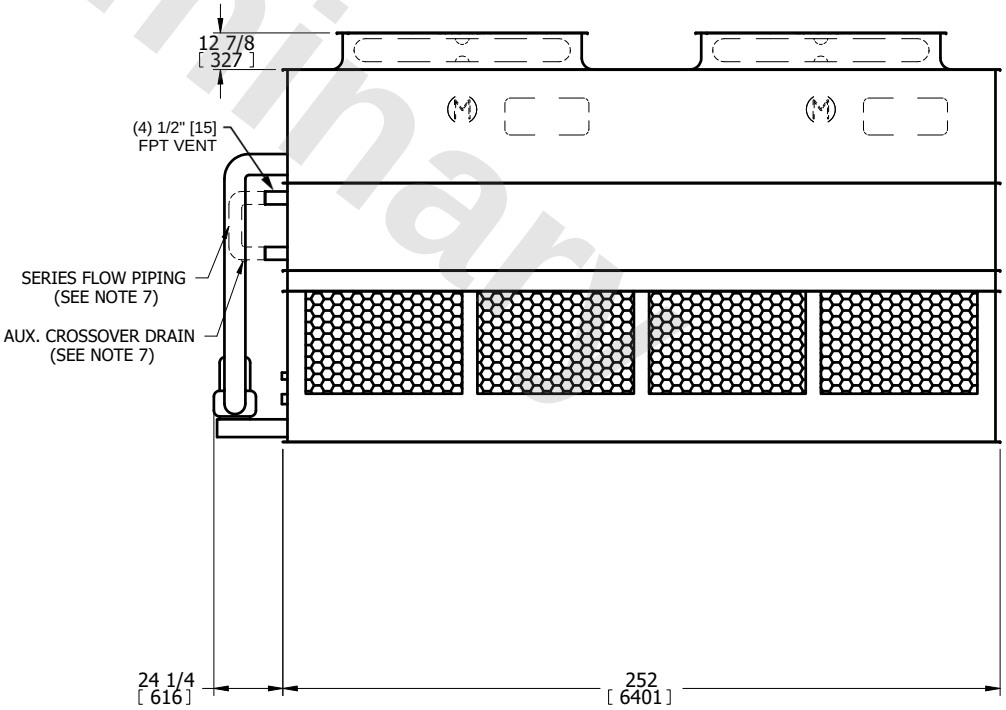

FACE A

SHIPPING WEIGHT	20530 lbs+ [9315] kg+	OPERATING WEIGHT	30130 lbs+ [13670] kg+	HEAVIEST SECTION WEIGHT	17430 lbs+ [7910] kg+	NO. OF SHIPPING SECTIONS	2	DRAWN BY:	JLG