UNIT	COOLING TOWER		EVAPCO, INC.	DWG. #	AX142417-DRA-ST	REV.	-
MODEL #	AXS 14-19Q24	SCALE		SERIAL #		DATE	4/29/2026

NOTES:
1. (M)- FAN MOTOR LOCATION
2. HEAVIEST SECTION IS UPPER SECTION
3. MPT DENOTES MALE PIPE THREAD
   FPT DENOTES FEMALE PIPE THREAD
   BFW DENOTES BEVELED FOR WELDING
   GVD DENOTES GROOVED
4. +UNIT WEIGHT DOES NOT INCLUDE ACCESSORIES (SEE ACCESSORY DRAWINGS)
5. MAKE-UP WATER PRESSURE 20 psi MIN [137 kPa], 50 psi MAX [344 kPa]
6. 3/4" DIA. MOUNTING HOLES. REFER TO RECOMMENDED STEEL SUPPORT DRAWING.
7. DIMENSIONS LISTED AS FOLLOWS: ENGLISH IN [METRIC] [mm]

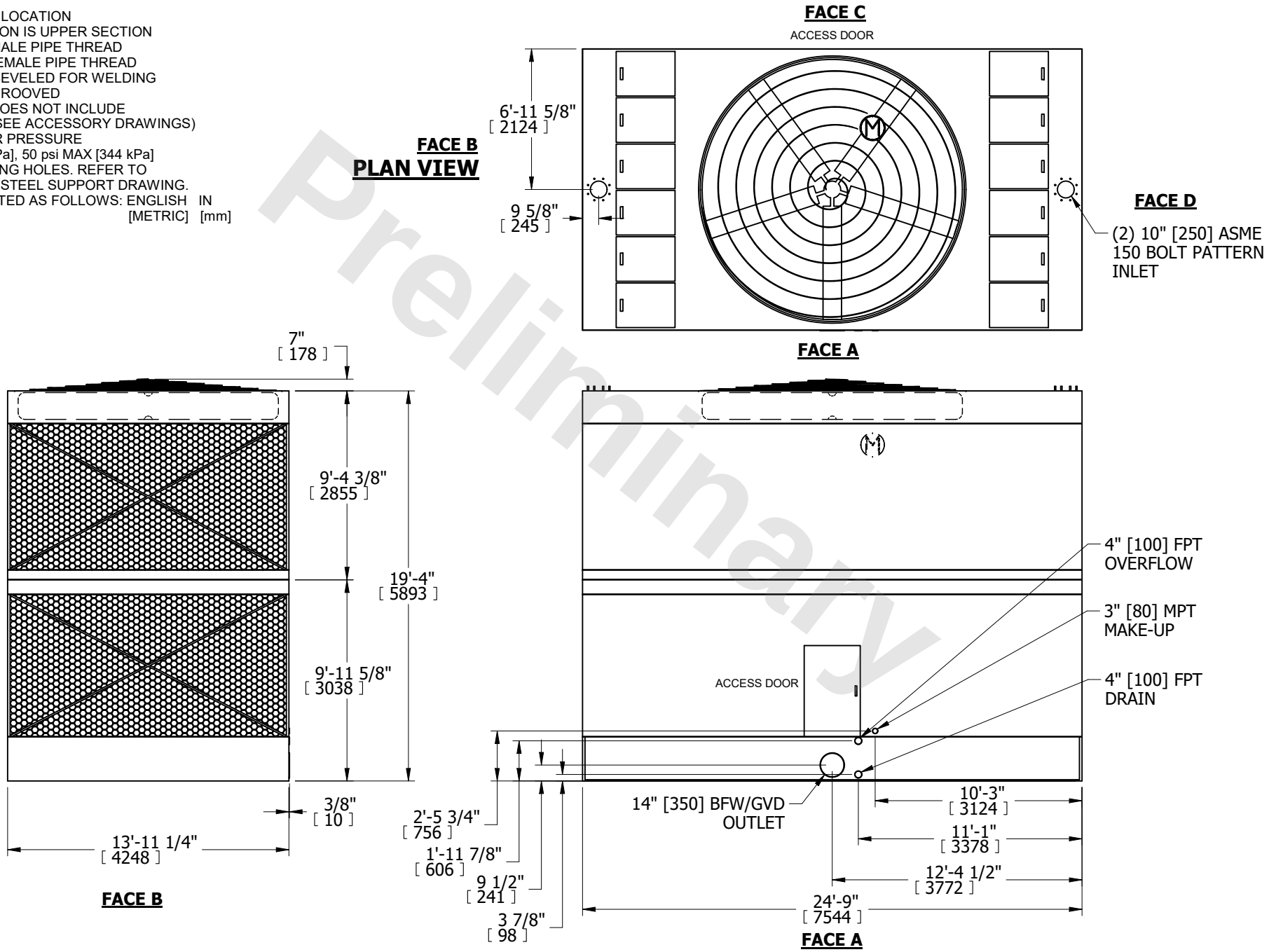

Preliminary

SHIPPING WEIGHT	21880 lbs+ [9925] kg+	OPERATING WEIGHT	48530 lbs+ [22015] kg+	HEAVIEST SECTION WEIGHT	12520 lbs+ [5680] kg+	NO. OF SHIPPING SECTIONS	2	DRAWN BY:	AWT