UNIT	CONDENSER		EVAPCO, INC.	DWG. #	WLE040604-DRE-ST	REV.	-
MODEL #	LSC-41E	SCALE	NTS	SERIAL #		DATE	10/9/2025

NOTES:
1. (M)- FAN MOTOR LOCATION
2. MPT DENOTES MALE PIPE THREAD
   FPT DENOTES FEMALE PIPE THREAD
   BFW DENOTES BEVELED FOR WELDING
   GVD DENOTES GROOVED
   FLG DENOTES FLANGE
   PE DENOTES PLAIN END
3. +UNIT WEIGHT DOES NOT INCLUDE ACCESSORIES (SEE ACCESSORY DRAWINGS)
4. 3/4" [19mm] DIA. MOUNTING HOLES. REFER TO RECOMMENDED STEEL SUPPORT DRAWING
5. DIMENSIONS LISTED AS FOLLOWS: ENGLISH FT IN [METRIC] [mm]
6. * - APPROXIMATE DIMENSIONS DO NOT USE FOR PRE-FABRICATION OF CONNECTING PIPING
7. MAKE-UP WATER PRESSURE 20 psi [137 kPa] MIN, 50 psi [344 kPa] MAX
8. MAKE-UP CONNECTION LOCATED 7-5/8" [194] FROM CONNECTION END OF UNIT

Preliminary

FACE C

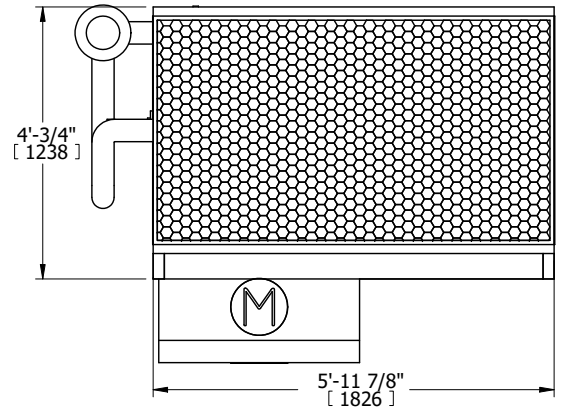

FACE B

PLAN VIEW

FACE D

FACE A

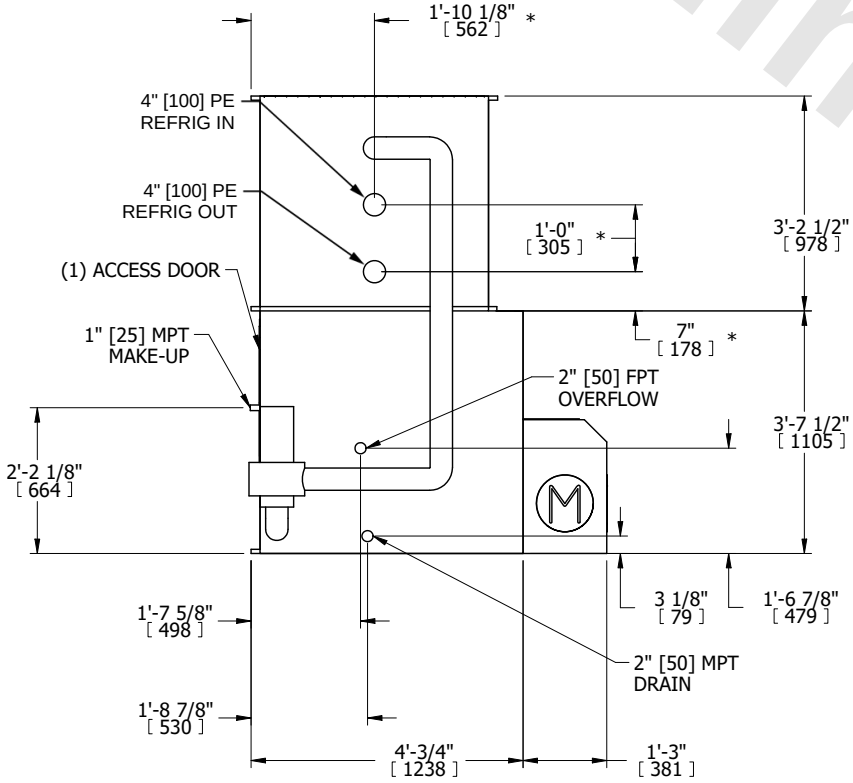

FACE B

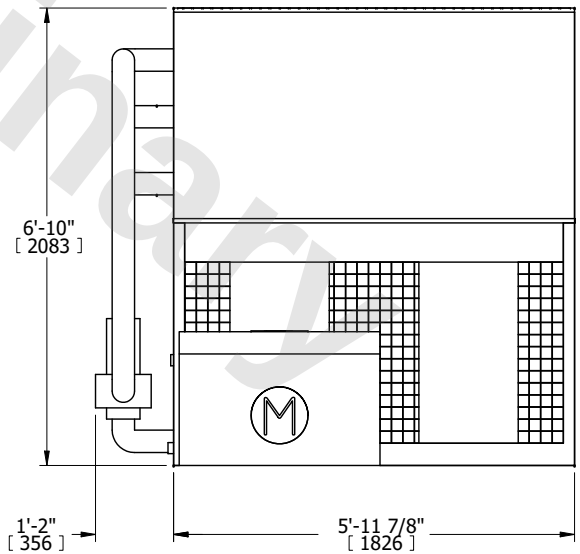

FACE A

SHIPPING WEIGHT	2370 lbs+ [1080] kg+	OPERATING WEIGHT	3090 lbs+ [1405] kg+	HEAVIEST SECTION WEIGHT	1230 lbs+ [560] kg+	NO. OF SHIPPING SECTIONS	2	DRAWN BY:	TLS