CONFIDENTIAL
This document is the property of Evapco, Inc. It should not be copied or disclosed without prior written authorization.

# EVAPCO, INC.

| CUSTOMER | MODEL # | SCALE | DWG. # | REV. | DATE |
|---|---|---|---|---|---|
| | SSTMB5-4783F0200F2LA | N.T.S. | STMC5-SE-16 | 0 | 4/23/2026 |

NOTES:

1) * = HANGER HOLE LOCATION.
2) RIGHT HAND MODEL SHOWN.
3) HANGER HOLES ARE FOR 3/4 INCH THREADED ROD.
4) WATER DEFROST ADDS 1 3/4" INCHES TO HEIGHT OF STANDARD UNIT AND CHANGES DRAIN SIZE.
5) ALL DIMENSIONS ARE FOR REFERENCE AND SHOULD NOT BE USED FOR PREFABRICATION OF PIPING OR SUPPORTS.

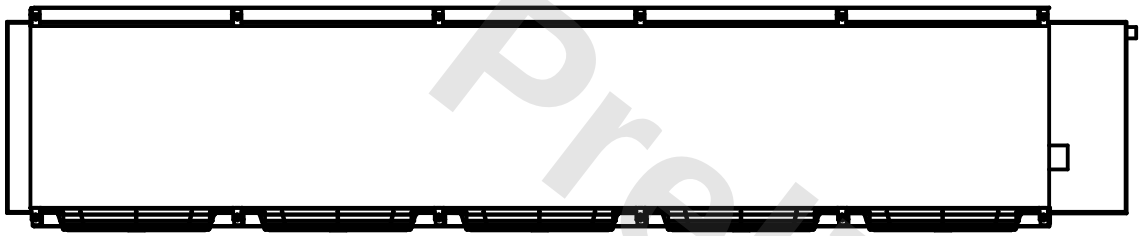

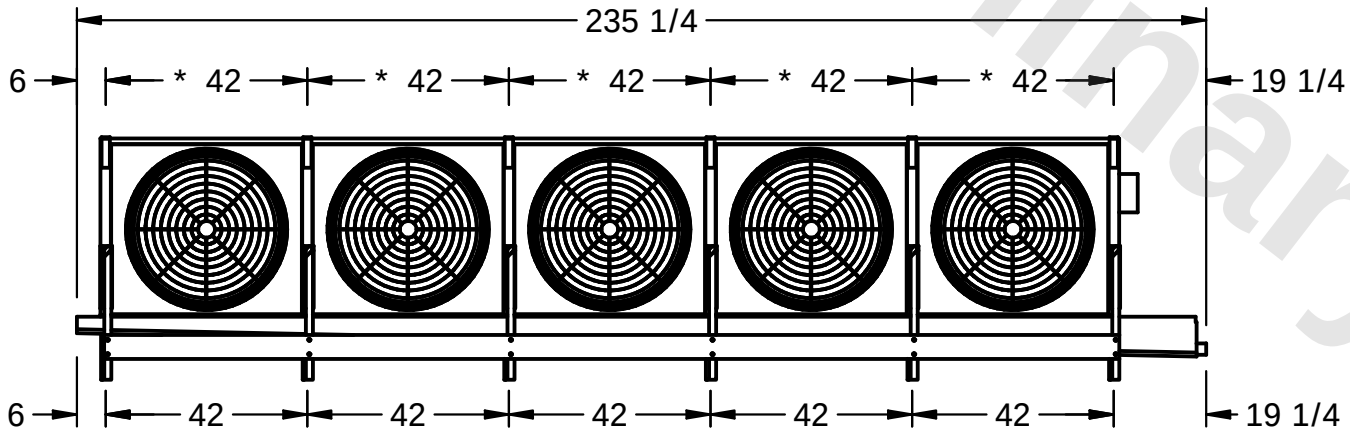


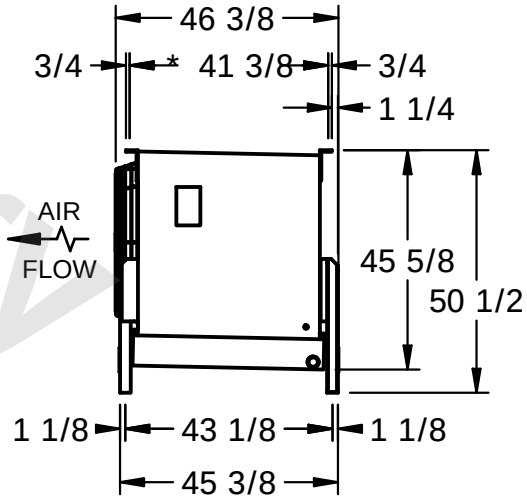


Preliminary

| PROJECT | ROOM | SHIPPING WEIGHT | OPERATING WEIGHT |
|---|---|---|---|
| | | 2420 lbs | 2790 lbs |