EVAPCO, INC.

UNIT	MODEL #	SCALE	DWG. #	REV.	DATE	SERIAL #
EVAPORATIVE CONDENSER	PHC-L799		HCS1224S14-DRC-ST	-	1/28/2026	

NOTES:
1. (M)- FAN MOTOR LOCATION
2. HEAVIEST SECTION IS UPPER SECTION
3. MPT DENOTES MALE PIPE THREAD
   FPT DENOTES FEMALE PIPE THREAD
   BFW DENOTES BEVELED FOR WELDING
   GVD DENOTES GROOVED
4. +UNIT WEIGHT DOES NOT INCLUDE ACCESSORIES (SEE ACCESSORY DRAWINGS)
5. MAKE-UP WATER PRESSURE 20 psi MIN [137 kPa], 50 psi MAX [344 kPa]
6. 3/4" DIA. MOUNTING HOLES. REFER TO RECOMMENDED STEEL SUPPORT DRAWING.
7. *- APPROXIMATE DIMENSIONS DO NOT USE FOR PRE-FABRICATION OF CONNECTION PIPING.
8. **-UNITS WITH 20HP PER FAN REQUIRE A TALLER FAN CYLINDER, ADD 5" TO THESE DIMENSIONS.
9. DIMENSIONS LISTED AS FOLLOWS: ENGLISH IN [METRIC] [mm]

Preliminary

FACE 2

PLAN VIEW

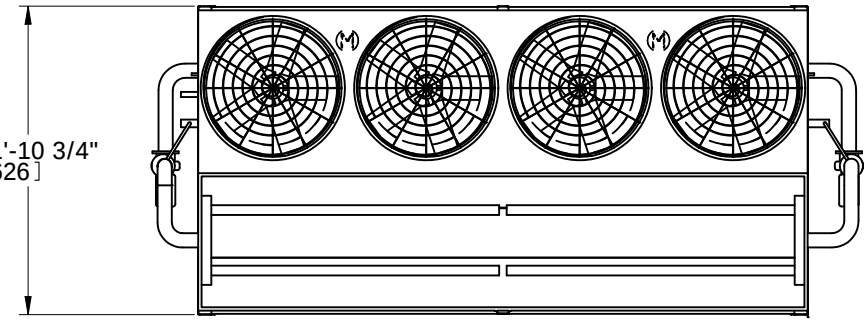

FACE 1

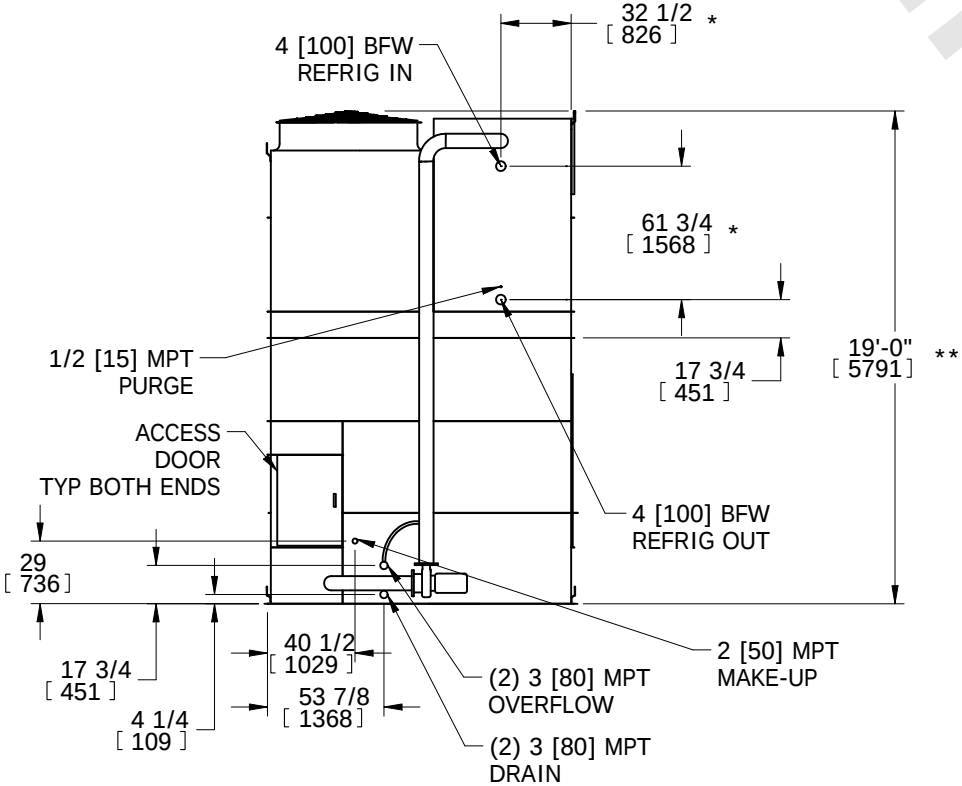

FACE 2

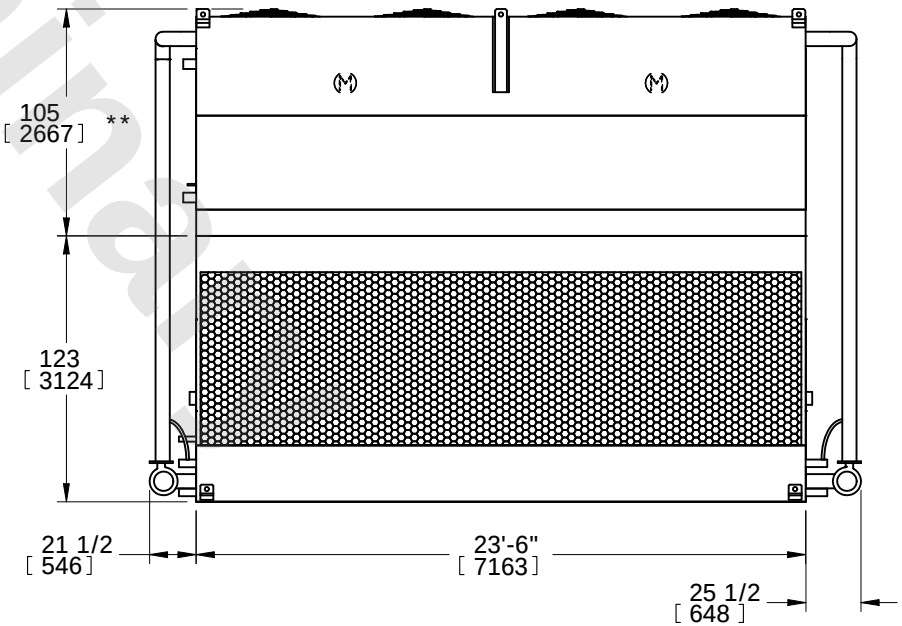

FACE 1

SHIPPING WEIGHT	OPERATING WEIGHT	HEAVIEST SECTION WEIGHT	NO. OF SHIPPING SECTIONS	DRAWN BY:
31560 lbs+ [14320] kg+	42720 lbs+ [19380] kg+	22760 lbs+ [10325] kg+	2	TLS