# EVAPCO, INC.

| UNIT | MODEL # | SCALE | DWG. # | REV. | DATE | SERIAL # |
|---|---|---|---|---|---|---|
| CONDENSER | eco-ATC-1401A | N.T.S. | EG241808-DRA-ST | - | 1/24/2026 | |

NOTES:
1. (M)- FAN MOTOR LOCATION
2. HEAVIEST SECTION IS UPPER SECTION
3. MPT DENOTES MALE PIPE THREAD
   FPT DENOTES FEMALE PIPE THREAD
   BFW DENOTES BEVELED FOR WELDING
4. +UNIT WEIGHT DOES NOT INCLUDE ACCESSORIES (SEE ACCESSORY DRAWINGS)
5. MAKE-UP WATER PRESSURE 20 psi MIN [137 kPa], 50 psi MAX [344 kPa]
6. *-APPROXIMATE DIMENSIONS DO NOT USE FOR PRE-FABRICATION OF CONNECTING PIPING
7. VENT PROVIDED ON CLOSED CIRCUIT COOLERS ONLY

Preliminary

**FACE 2**
**PLAN VIEW**

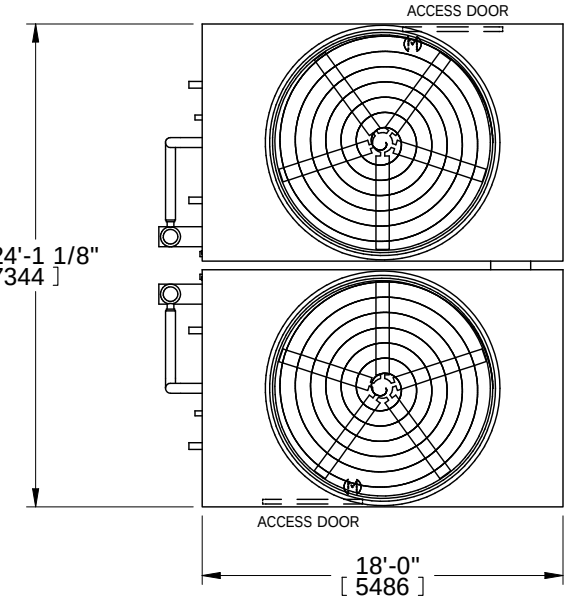


**FACE 1**

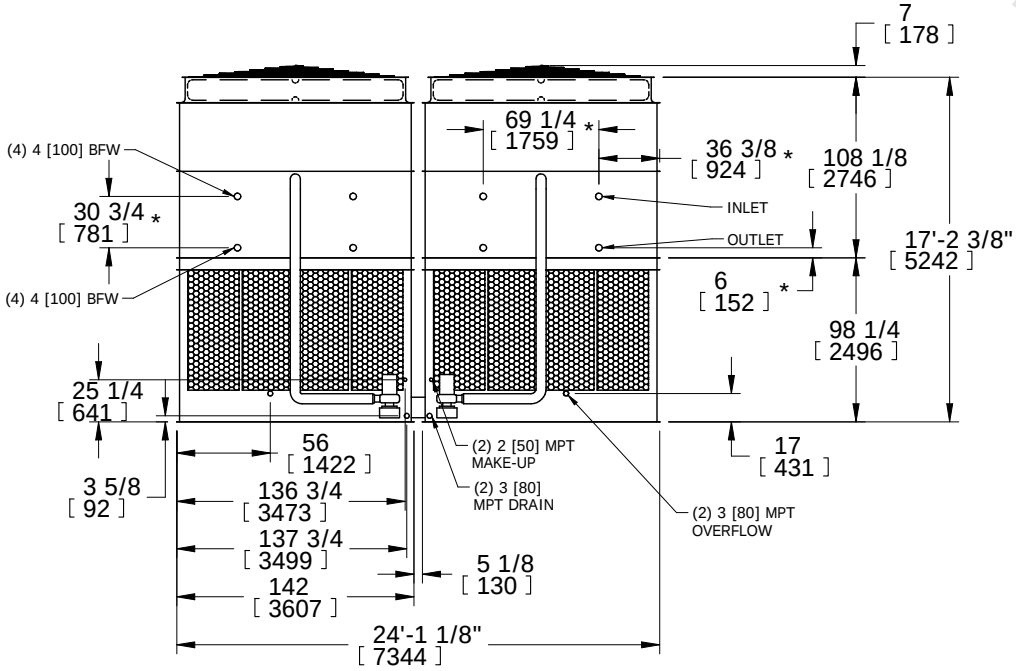


**FACE 2**

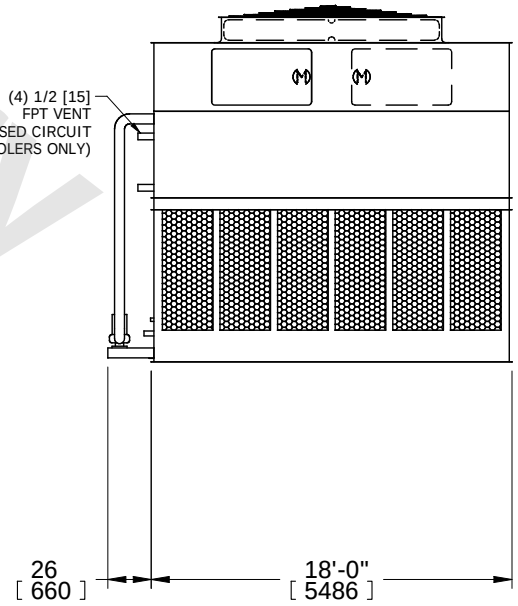


**FACE 1**

| SHIPPING WEIGHT | OPERATING WEIGHT | HEAVIEST SECTION WEIGHT | NO. OF SHIPPING SECTIONS |
|---|---|---|---|
| 58120 lbs+ [26365] kg+ | 78600 lbs+ [35655] kg+ | 25140 lbs+ [11405] kg+ | 4 |