UNIT	CLOSED CIRCUIT COOLER			DWG. #	WX412182408F-DRA-ST	REV	-
MODEL #	ESW4 12-24M18-LF	SCALE	NTS	SERIAL #		DATE:	3/11/2026

EVAPCO, INC.

NOTES:
1. (M)- FAN MOTOR LOCATION
2. HEAVIEST SECTION IS COIL SECTION
3. MPT DENOTES MALE PIPE THREAD
   FPT DENOTES FEMALE PIPE THREAD
   BFW DENOTES BEVELED FOR WELDING
   GVD DENOTES GROOVED
   FLG DENOTES FLANGE
4. +UNIT WEIGHT DOES NOT INCLUDE ACCESSORIES (SEE ACCESSORY DRAWINGS)
5. 3/4" [19MM] DIA. MOUNTING HOLES. REFER TO RECOMMENDED STEEL SUPPORT DRAWING
6. MAKE-UP WATER PRESSURE 20 psi MIN [137 kPa], 50 psi MAX [344 kPa]
7. DIMENSIONS LISTED AS FOLLOWS:
   ENGLISH FT-IN
   [METRIC] [mm]
8. * - APPROXIMATE DIMENSIONS DO NOT USE FOR PRE-FABRICATION OF CONNECTING PIPING

Preliminary

FACE C

FACE B
PLAN VIEW

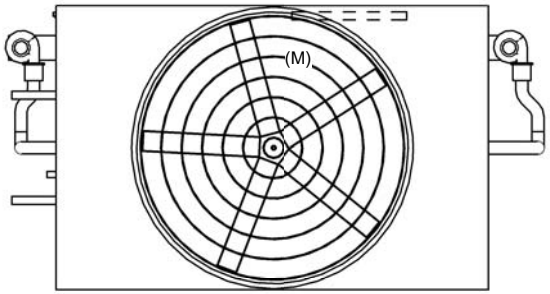

FACE D

FACE A

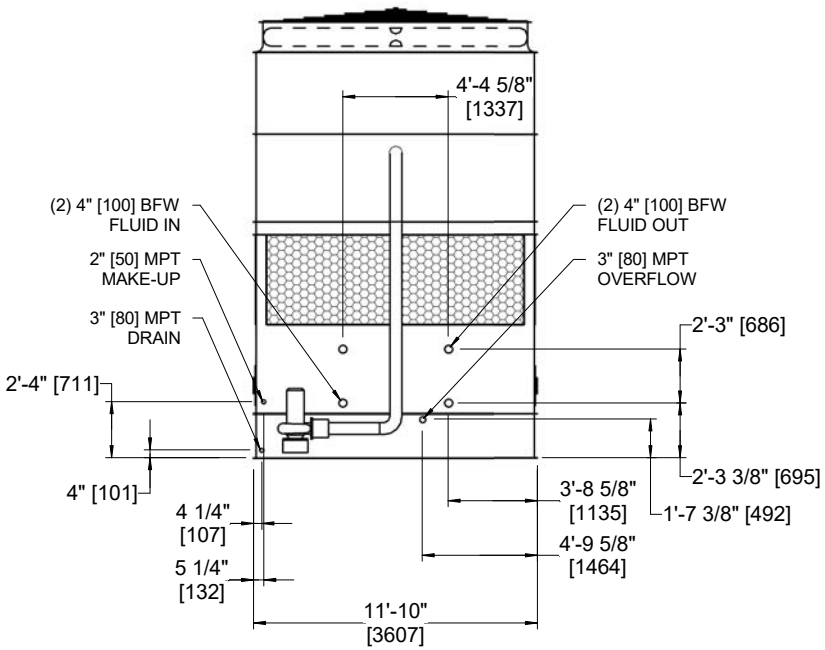

FACE B

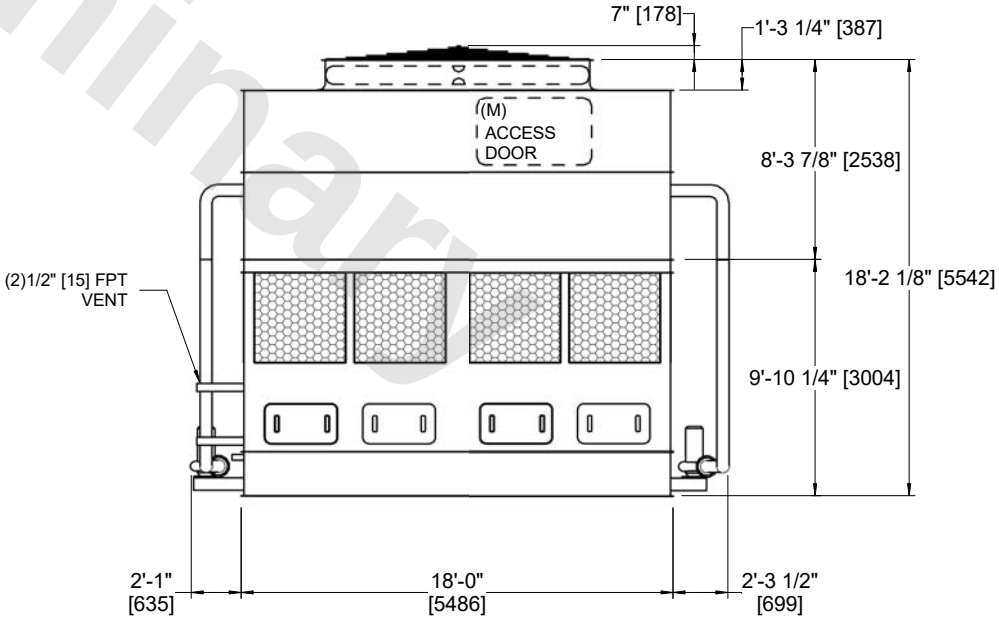

FACE A

SHIPPING WEIGHT	28440 lbs+ [12905] kg+	OPERATING WEIGHT	42590 lbs+ [19320] kg+	HEAVIEST SECTION WEIGHT	21620 lbs+ [9810] kg+	NO. OF SHIPPING SECTIONS	2	DRAWN BY:	AWT