| UNIT | CLOSED CIRCUIT COOLER | | | DWG. # | WX412122412F-DRA-ST | REV | - |
|---|---|---|---|---|---|---|---|
| MODEL # | ESW4 12-26I12-LF | SCALE | NTS | SERIAL # | | DATE: | 7/14/2025 |

# EVAPCO, INC.

NOTES:
1. (M)- FAN MOTOR LOCATION
2. HEAVIEST SECTION IS COIL SECTION
3. MPT DENOTES MALE PIPE THREAD
   FPT DENOTES FEMALE PIPE THREAD
   BFW DENOTES BEVELED FOR WELDING
   GVD DENOTES GROOVED
   FLG DENOTES FLANGE
4. +UNIT WEIGHT DOES NOT INCLUDE ACCESSORIES (SEE ACCESSORY DRAWINGS)
5. 3/4" [19MM] DIA. MOUNTING HOLES. REFER TO RECOMMENDED STEEL SUPPORT DRAWING
6. MAKE-UP WATER PRESSURE 20 psi MIN [137 kPa], 50 psi MAX [344 kPa]
7. DIMENSIONS LISTED AS FOLLOWS:
   ENGLISH FT-IN
   [METRIC] [mm]
8. * - APPROXIMATE DIMENSIONS DO NOT USE FOR PRE-FABRICATION OF CONNECTING PIPING

Preliminary

**FACE C**

**FACE B**
**PLAN VIEW**

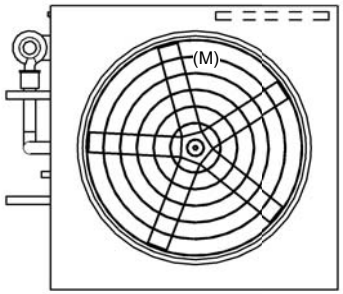


**FACE D**

**FACE A**

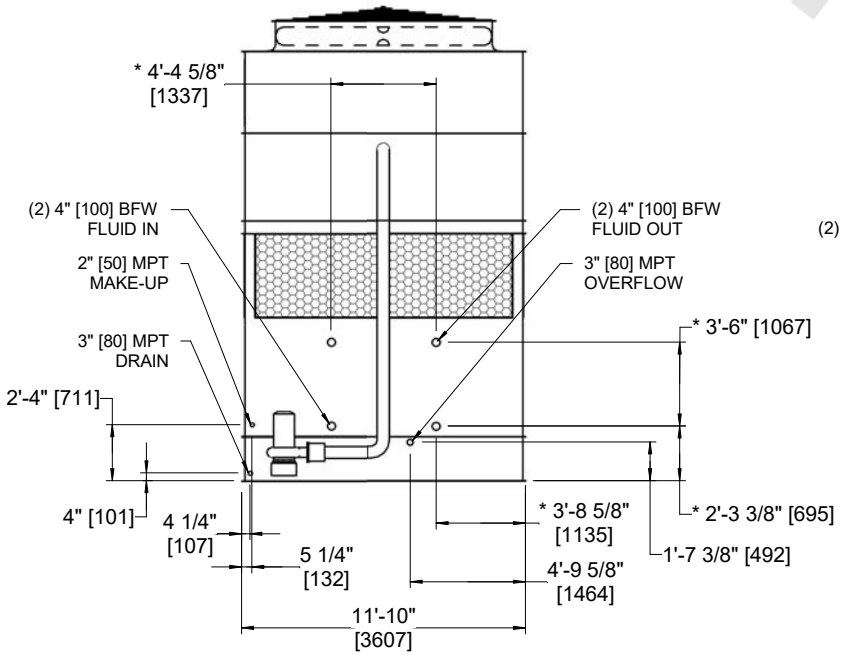


**FACE B**

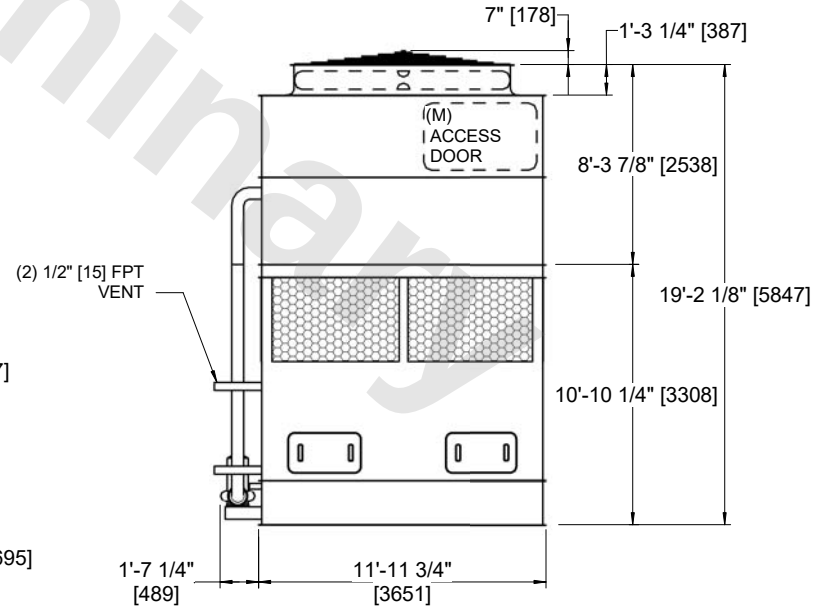


**FACE A**

| SHIPPING WEIGHT | 23560 lbs+ [10690] kg+ | OPERATING WEIGHT | 34510 lbs+ [15655] kg+ | HEAVIEST SECTION WEIGHT | 18610 lbs+ [8445] kg+ | NO. OF SHIPPING SECTIONS | 2 | DRAWN BY: | AWT |
|---|---|---|---|---|---|---|---|---|---|