UNIT	COOLING TOWER		EVAPCO, INC.	DWG. #	T3TM2424-DRD-ST	REV.	-
MODEL #	AT 210-2K24	SCALE NTS		SERIAL #		DATE	5/2/2026

NOTES:
1. (M)- FAN MOTOR LOCATION
2. HEAVIEST SECTION IS UPPER SECTION
3. MPT DENOTES MALE PIPE THREAD
   FPT DENOTES FEMALE PIPE THREAD
   BFW DENOTES BEVELED FOR WELDING
   GVD DENOTES GROOVED
   FLG DENOTES FLANGE
4. +UNIT WEIGHT DOES NOT INCLUDE ACCESSORIES (SEE ACCESSORY DRAWINGS)
5. MAKE-UP WATER PRESSURE 20 psi MIN [137 kPa], 50 psi MAX [344 kPa]
6. 3/4" [19MM] DIA. MOUNTING HOLES. REFER TO RECOMENDED STEEL SUPPORT DRAWING.
7. DIMENSIONS LISTED AS FOLLOWS:
   ENGLISH FT-IN
   [METRIC] [mm]

Preliminary

FACE C

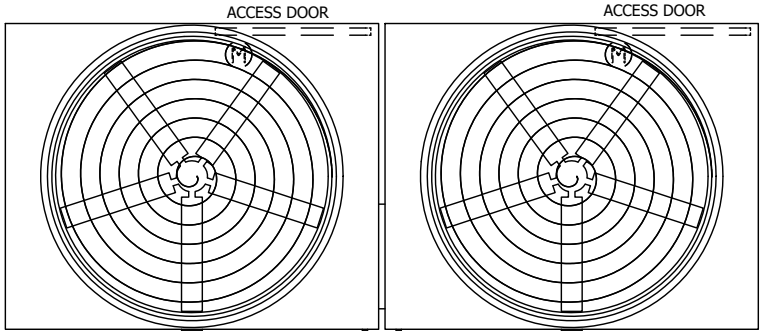

FACE B

PLAN VIEW

FACE D

FACE A

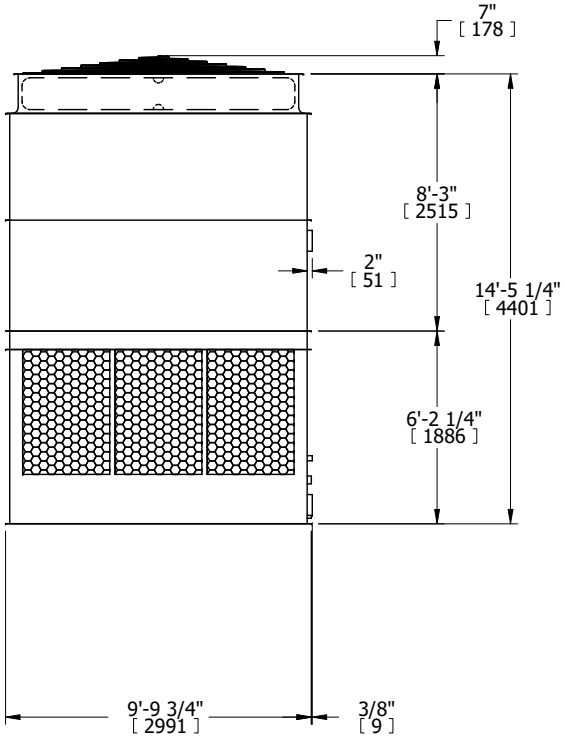

FACE B

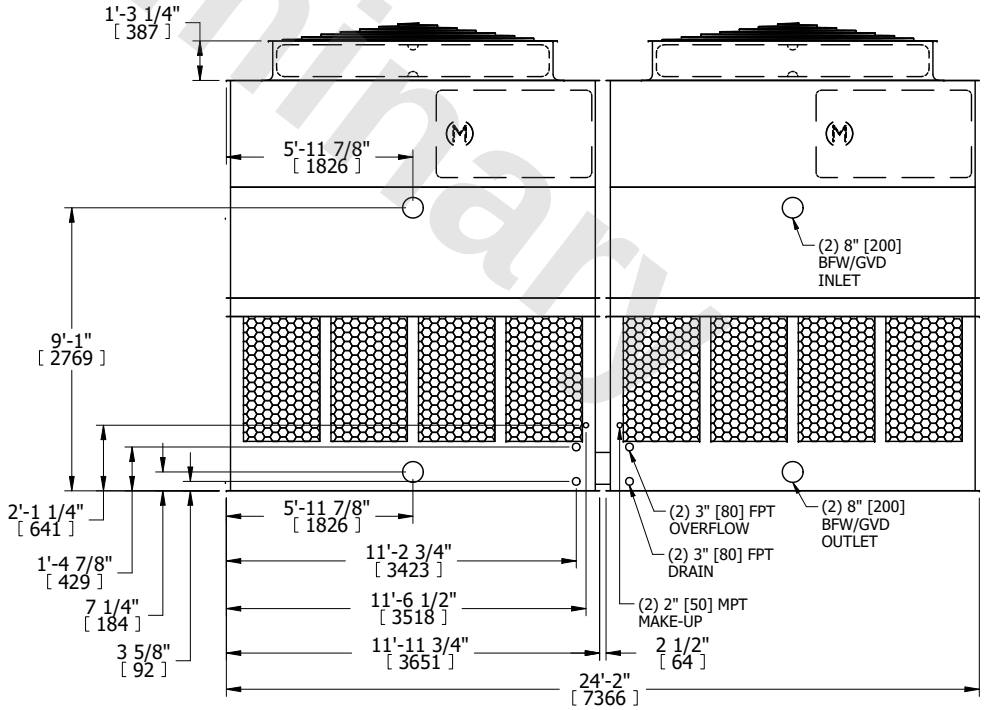

FACE A

SHIPPING WEIGHT	13520 lbs+ [6135] kg+	OPERATING WEIGHT	23440 lbs+ [10635] kg+	HEAVIEST SECTION WEIGHT	4320 lbs+ [1960] kg+	NO. OF SHIPPING SECTIONS	4	DRAWN BY:	JLG