UNIT	COOLING TOWER			DWG. #	T3092824-DRD-ST	REV.	-
MODEL #	AT 29-2I28	SCALE	NTS	SERIAL #		DATE	9/17/2025

EVAPCO, INC.

NOTES:
1. (M)- FAN MOTOR LOCATION
2. HEAVIEST SECTION IS UPPER SECTION
3. MPT DENOTES MALE PIPE THREAD
   FPT DENOTES FEMALE PIPE THREAD
   BFW DENOTES BEVELED FOR WELDING
   GVD DENOTES GROOVED
   FLG DENOTES FLANGE
4. +UNIT WEIGHT DOES NOT INCLUDE ACCESSORIES (SEE ACCESSORY DRAWINGS)
5. MAKE-UP WATER PRESSURE
   20 psi MIN [137 kPa], 50 psi MAX [344 kPa]
6. 3/4" [19MM] DIA. MOUNTING HOLES. REFER TO RECOMENDED STEEL SUPPORT DRAWING.
7. DIMENSIONS LISTED AS FOLLOWS:
   ENGLISH FT-IN
   [METRIC] [mm]

Preliminary

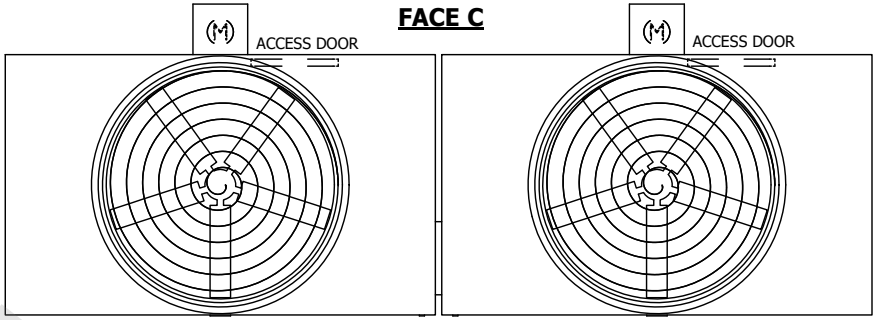

FACE B

PLAN VIEW

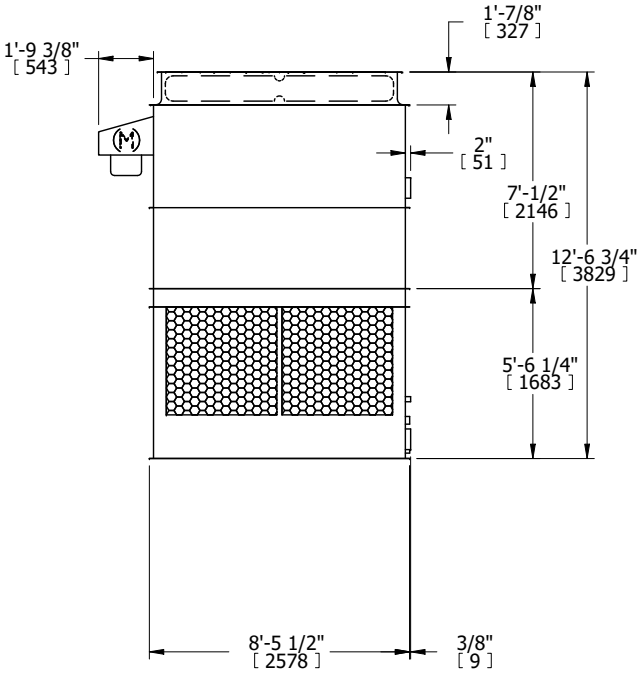

FACE B

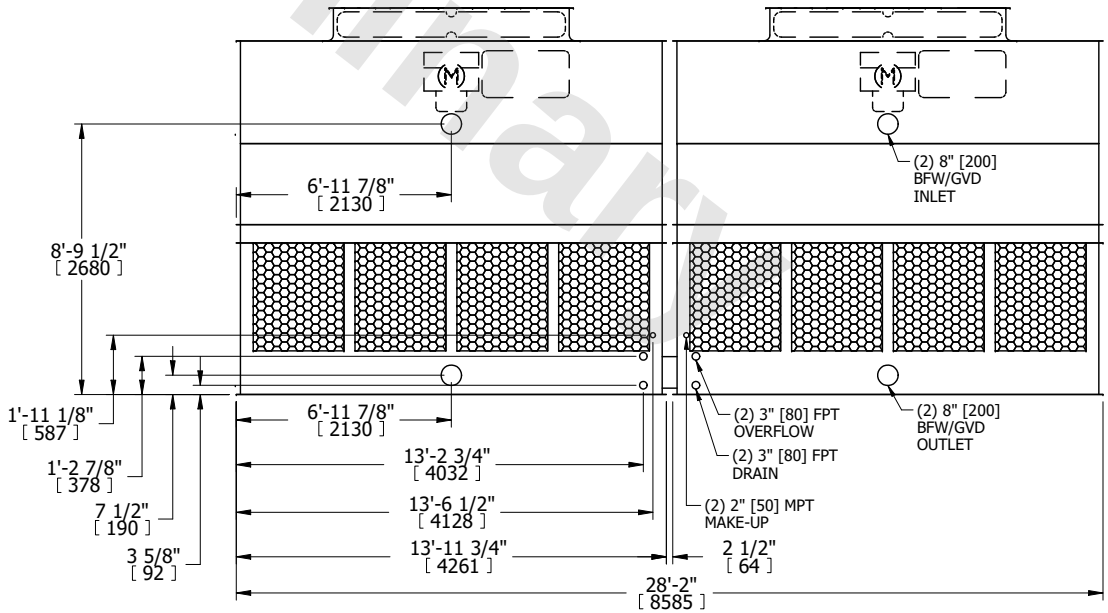

FACE A

SHIPPING WEIGHT	11700 lbs+ [5310] kg+	OPERATING WEIGHT	20720 lbs+ [9400] kg+	HEAVIEST SECTION WEIGHT	3710 lbs+ [1685] kg+	NO. OF SHIPPING SECTIONS	4	DRAWN BY:	JLG