UNIT	CONDENSER		EVAPCO, INC.	DWG. #	CEWRTM1206-DRA-ST	REV	-
MODEL #	PMRC-428	SCALE NTS		SERIAL #		DATE:	4/26/2026

NOTES:

1. (M)- FAN MOTOR LOCATION.
2. MPT DENOTES MALE PIPE THREAD
   FPT DENOTES FEMALE PIPE THREAD
   BFW DENOTES BEVELED FOR WELDING
   GVD DENOTES GROOVED
   FLG DENOTES FLANGE
   PE DENOTES PLAIN END
3. +UNIT WEIGHT DOES NOT INCLUDE ACCESSORIES (SEE ACCESSORY DRAWINGS).
4. 3/4" [19mm] DIA. MOUNTING HOLES. REFER TO RECOMMENDED STEEL SUPPORT DRAWING.
5. MAKE-UP WATER PRESSURE 20 psi [137 kPa] MIN, 50 psi [344 kPa] MAX.
6. DIMENSIONS LISTED AS FOLLOWS:
   ENGLISH FT-IN
   [METRIC] [mm]
7. * - APPROXIMATE DIMENSIONS DO NOT USE FOR PRE-FABRICATION OF CONNECTING PIPING.

Preliminary

FACE C

FACE B

PLAN VIEW

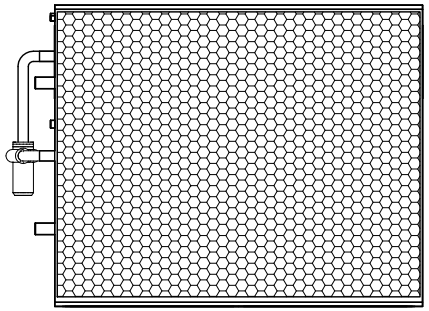

FACE D

FACE A

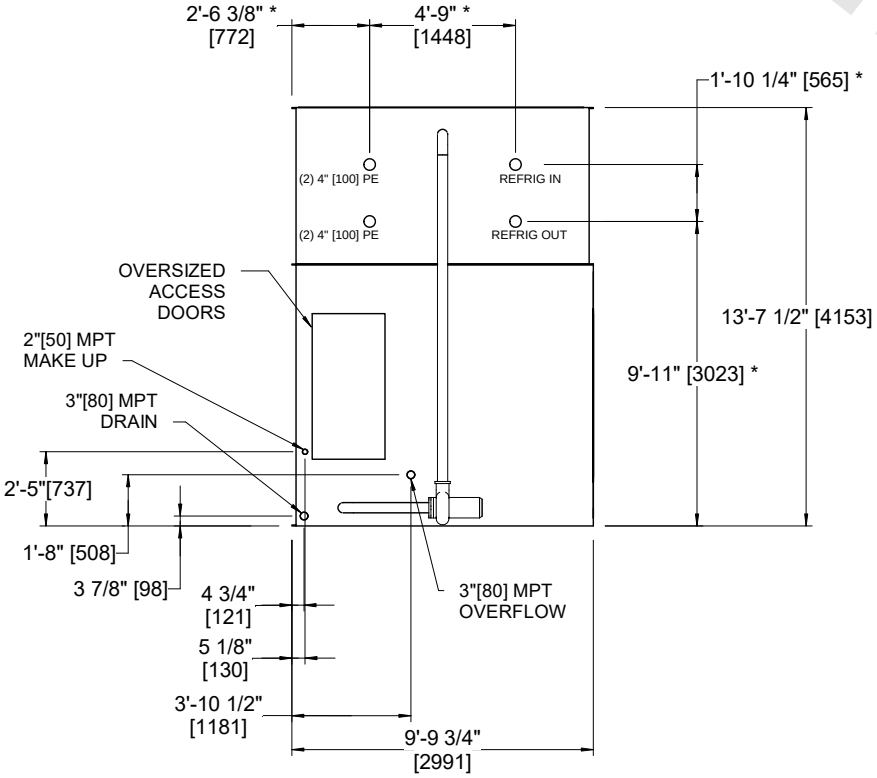

FACE B

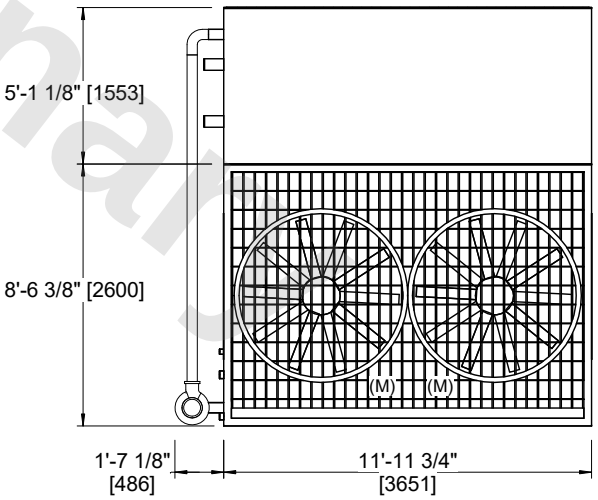

FACE A

SHIPPING WEIGHT	14180 lbs+ [6435] kg+	OPERATING WEIGHT	17890 lbs+ [8115] kg+	HEAVIEST SECTION WEIGHT	8590 lbs+ [3900] kg+	NO. OF SHIPPING SECTIONS	2	DRAWN BY:	JLG