CONFIDENTIAL
This document is the property of Evapco, Inc. It should not be copied or disclosed without prior written authorization.

CUSTOMER	MODEL #	SCALE	DWG. #	REV.	DATE
	U-EJETME1-1166H0075F3KA	N.T.S.	UEJETM1-SE-16,18	0	6/11/2026

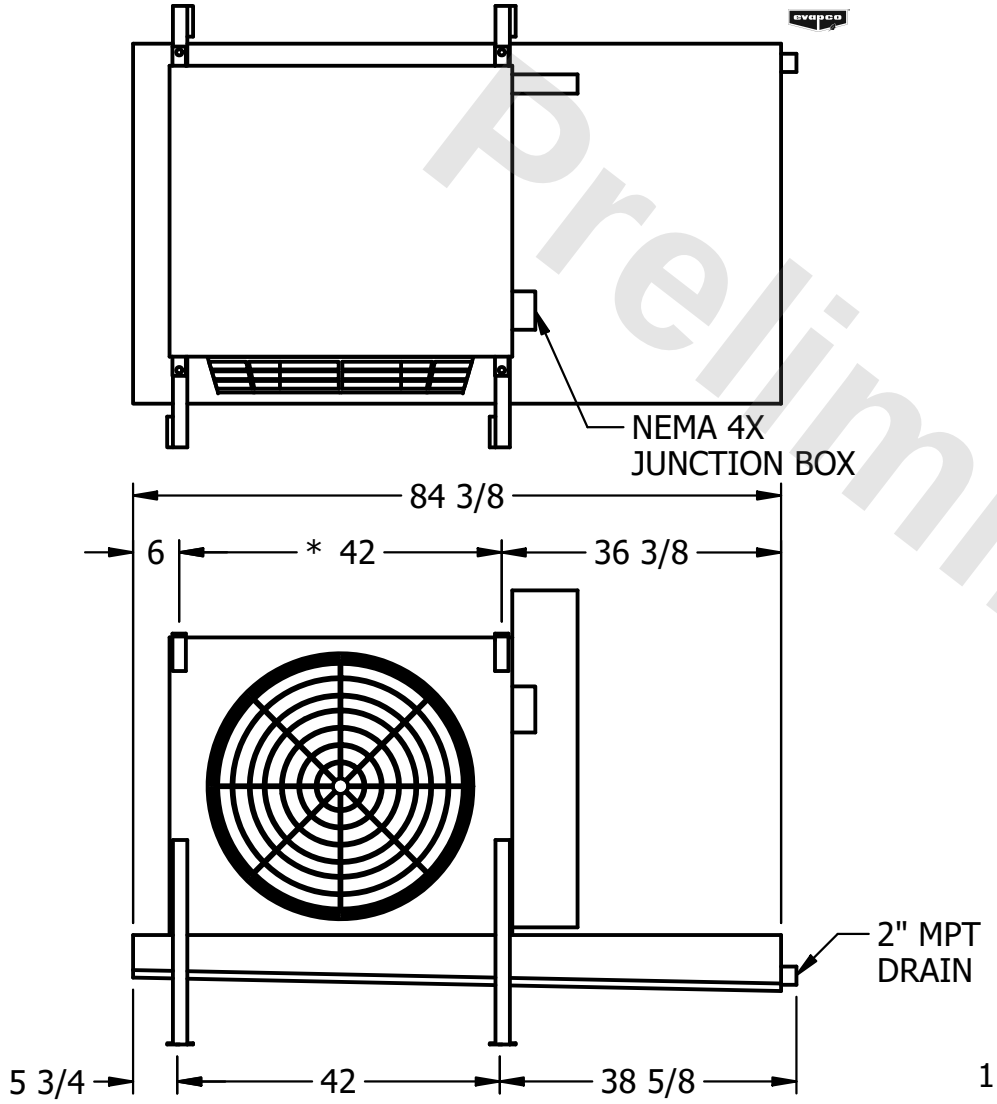

NOTES:

1) * = HANGER HOLE LOCATION.
2) RIGHT HAND MODEL SHOWN.
3) HANGER HOLES ARE FOR 3/4 INCH THREADED ROD.
4) WATER DEFROST ADDS 1 3/4" INCHES TO HEIGHT OF STANDARD UNIT AND CHANGES DRAIN SIZE.
5) ALL DIMENSIONS ARE FOR REFERENCE AND SHOULD NOT BE USED FOR PREFABRICATION OF PIPING OR SUPPORTS.
6) **= HEIGHT OF SUCTION HEADER AND INSTALLED THERMOWELL FITTING ABOVE CABINET. CUSTOMER IS RESPONSIBLE TO ACCOUNT FOR ADDITIONAL HEIGHT NECESSARY FOR RTD AND ACCESS.

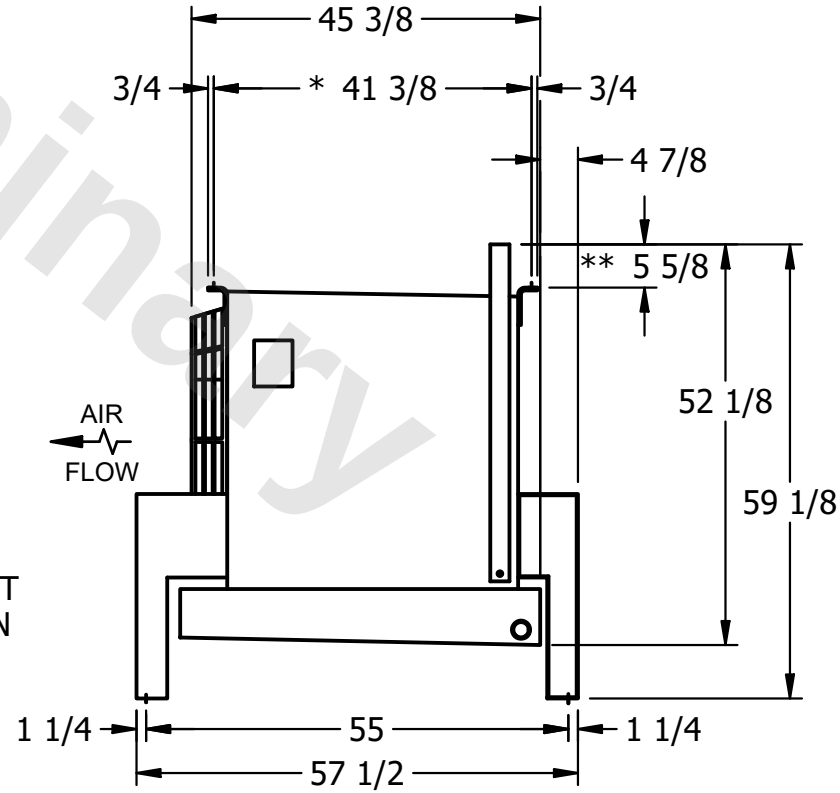

Preliminary

PROJECT	ROOM	SHIPPING WEIGHT	OPERATING WEIGHT
		730 lbs+ [335] kg+	830 lbs+ [380] kg+