UNIT	COOLING TOWER		EVAPCO, INC.	DWG. #	T4147224-DRA-ST	REV.	-
MODEL #	AT 314-2M72	SCALE NTS		SERIAL #		DATE	6/30/2026

NOTES:
1. (M)- FAN MOTOR LOCATION
2. HEAVIEST SECTION IS UPPER SECTION
3. MPT DENOTES MALE PIPE THREAD
   FPT DENOTES FEMALE PIPE THREAD
   BFW DENOTES BEVELED FOR WELDING
   GVD DENOTES GROOVED
   FLG DENOTES FLANGE
   PE DENOTES PLAIN END
4. +UNIT WEIGHT DOES NOT INCLUDE ACCESSORIES (SEE ACCESSORY DRAWINGS)
5. MAKE-UP WATER PRESSURE 20 psi MIN [137 kPa], 50 psi MAX [344 kPa]
6. 3/4" [19MM] DIA. MOUNTING HOLES. REFER TO RECOMMENDED STEEL SUPPORT DRAWING
7. DIMENSIONS LISTED AS FOLLOWS:
   ENGLISH FT-IN
   [METRIC] [mm]

PLAN VIEW

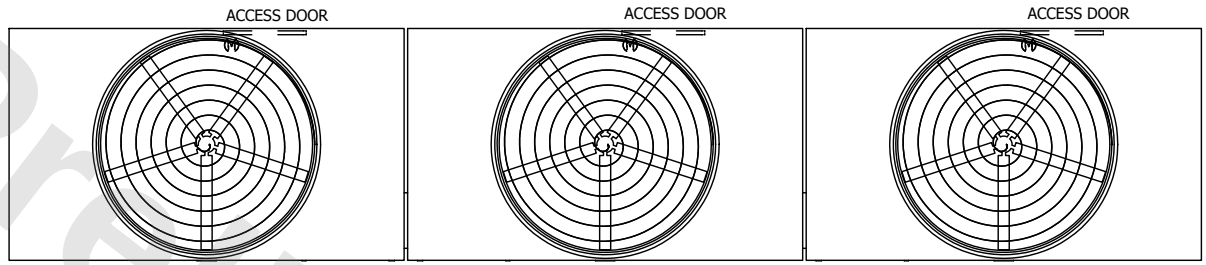

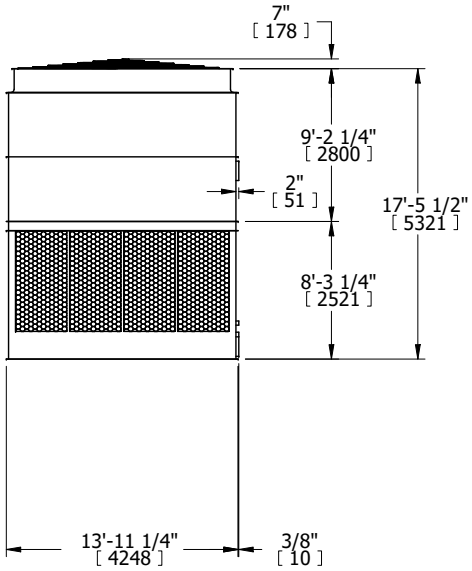

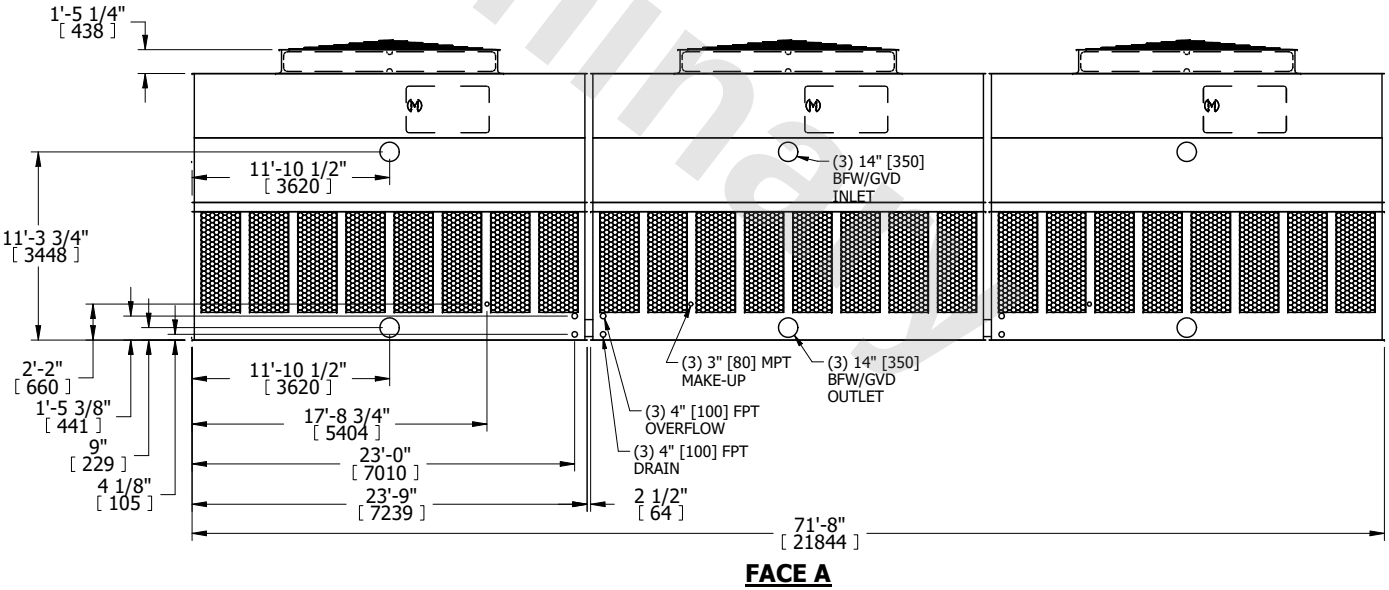

Preliminary

SHIPPING WEIGHT	53550 lbs+ [24290] kg+	OPERATING WEIGHT	97740 lbs+ [44335] kg+	HEAVIEST SECTION WEIGHT	10670 lbs+ [4840] kg+	NO. OF SHIPPING SECTIONS	6	DRAWN BY:	MER