UNIT	COOLING TOWER			DWG. #	T3128536-DRF-ST	REV.	-
MODEL #	AT 212-3I9	SCALE	NTS	SERIAL #		DATE	11/21/2025

EVAPCO, INC.

NOTES:
1. (M)- FAN MOTOR LOCATION
2. HEAVIEST SECTION IS UPPER SECTION
3. MPT DENOTES MALE PIPE THREAD
   FPT DENOTES FEMALE PIPE THREAD
   BFW DENOTES BEVELED FOR WELDING
   GVD DENOTES GROOVED
   FLG DENOTES FLANGE
4. +UNIT WEIGHT DOES NOT INCLUDE ACCESSORIES (SEE ACCESSORY DRAWINGS)
5. MAKE-UP WATER PRESSURE
   20 psi MIN [137 kPa], 50 psi MAX [344 kPa]
6. 3/4" [19MM] DIA. MOUNTING HOLES.
   REFER TO RECOMMENDED STEEL SUPPORT DRAWING
7. DIMENSIONS LISTED AS FOLLOWS:
   ENGLISH FT-IN
   [METRIC] [mm]

Preliminary

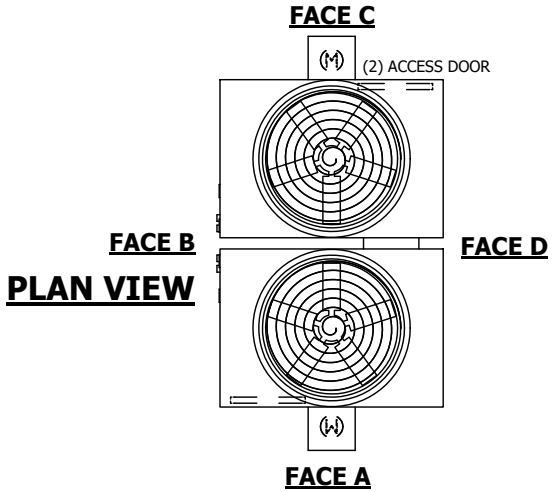

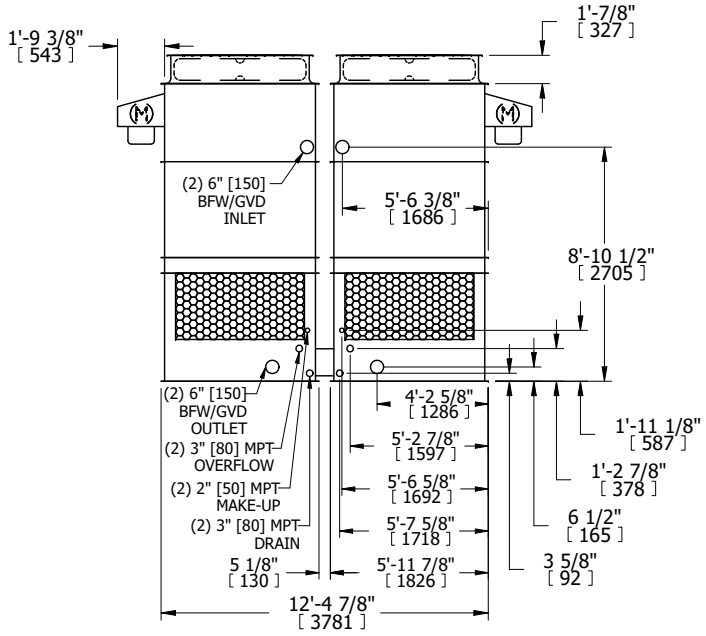

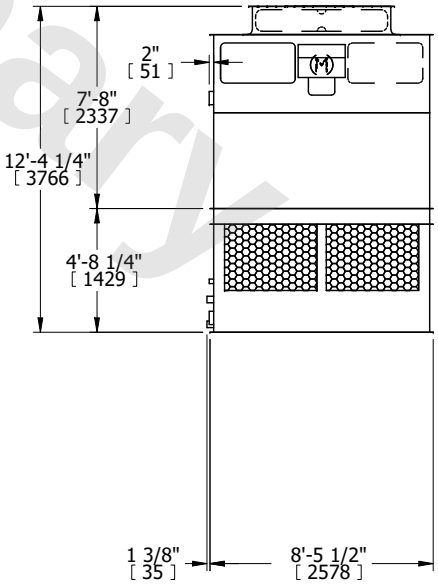

SHIPPING WEIGHT	6940 lbs+ [3150] kg+	OPERATING WEIGHT	11020 lbs+ [5000] kg+	HEAVIEST SECTION WEIGHT	2280 lbs+ [1035] kg+	NO. OF SHIPPING SECTIONS	4	DRAWN BY:	KDS