UNIT	COOLING TOWER		EVAPCO, INC.	DWG. #	T3170924-DRG-ST	REV.	-
MODEL #	AT 217-2H9	SCALE NTS		SERIAL #		DATE	5/8/2026

NOTES:
1. (M)- FAN MOTOR LOCATION
2. HEAVIEST SECTION IS UPPER SECTION
3. MPT DENOTES MALE PIPE THREAD
   FPT DENOTES FEMALE PIPE THREAD
   BFW DENOTES BEVELED FOR WELDING
   GVD DENOTES GROOVED
   FLG DENOTES FLANGE
4. +UNIT WEIGHT DOES NOT INCLUDE ACCESSORIES (SEE ACCESSORY DRAWINGS)
5. MAKE-UP WATER PRESSURE
   20 psi MIN [137 kPa], 50 psi MAX [344 kPa]
6. 3/4" [19MM] DIA. MOUNTING HOLES.
   REFER TO RECOMMENDED STEEL SUPPORT DRAWING
7. DIMENSIONS LISTED AS FOLLOWS:
   ENGLISH FT-IN
   [METRIC] [mm]

Preliminary

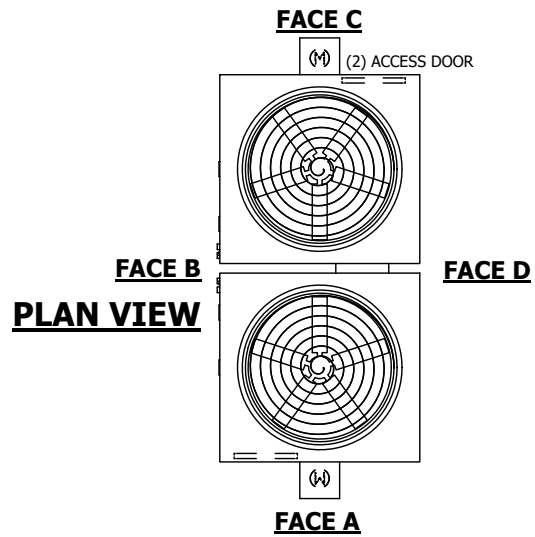

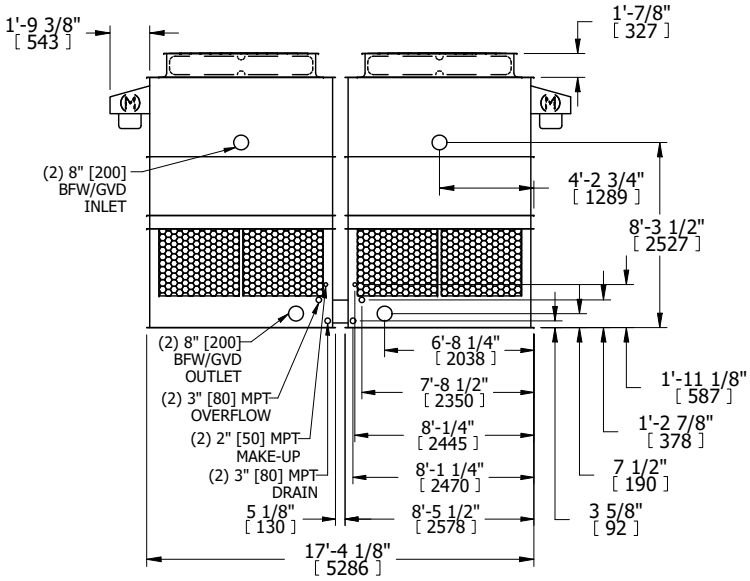

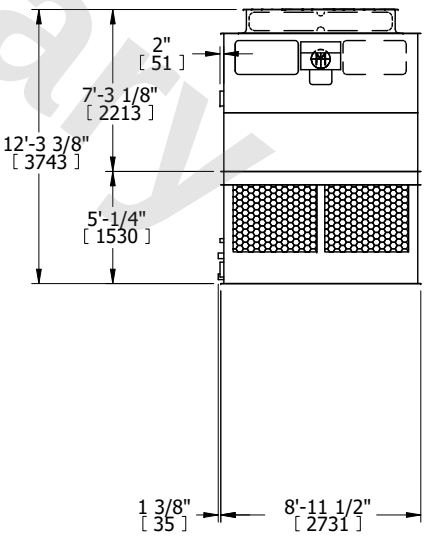

SHIPPING WEIGHT	8500 lbs+ [3860] kg+	OPERATING WEIGHT	14180 lbs+ [6435] kg+	HEAVIEST SECTION WEIGHT	2710 lbs+ [1230] kg+	NO. OF SHIPPING SECTIONS	4	DRAWN BY:	KDS