UNIT	MODEL #	SCALE	EVAPCO, INC.	DWG. #	REV
COOLING TOWER	AT 214-3L14	NTS		CT4C141436-DRA-ST	-
				SERIAL #	DATE: 9/28/2025

NOTES:
1. (M)- FAN MOTOR LOCATION
2. HEAVIEST SECTION IS FAN/CASING SECTION
3. MPT DENOTES MALE PIPE THREAD
   FPT DENOTES FEMALE PIPE THREAD
   BFW DENOTES BEVELED FOR WELDING
   GVD DENOTES GROOVED
   FLG DENOTES FLANGE
4. +UNIT WEIGHT DOES NOT INCLUDE ACCESSORIES (SEE ACCESSORY DRAWINGS)
5. 3/4" [19MM] DIA. MOUNTING HOLES. REFER TO RECOMMENDED STEEL SUPPORT DRAWING
6. DIMENSIONS LISTED AS FOLLOWS:
   ENGLISH FT-IN
   [METRIC] [mm]
7. MAKE-UP WATER PRESSURE 20 psi MIN [137 kPa], 50 psi MAX [344 kPa]

Preliminary

FACE C

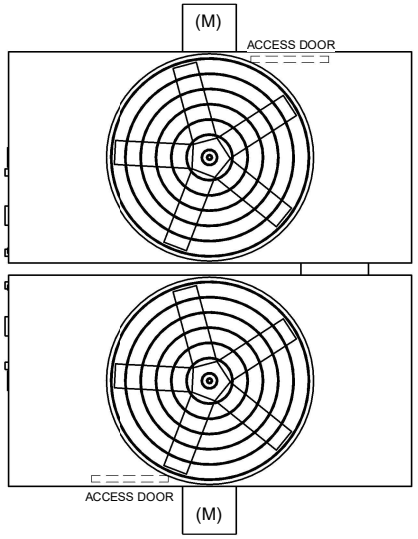

FACE B
PLAN VIEW

FACE D

FACE A

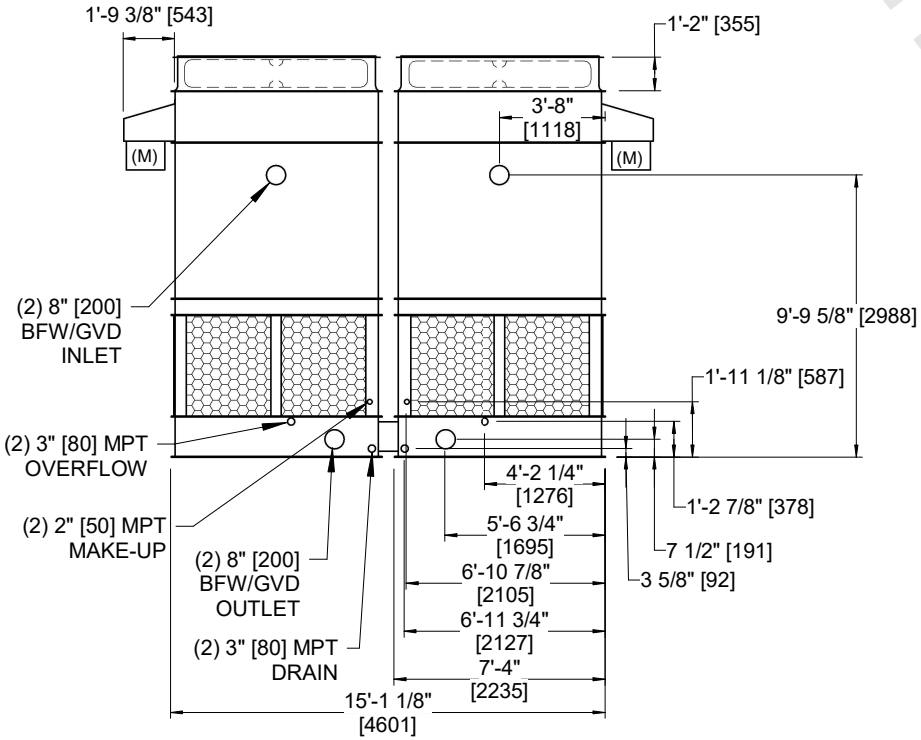

FACE B

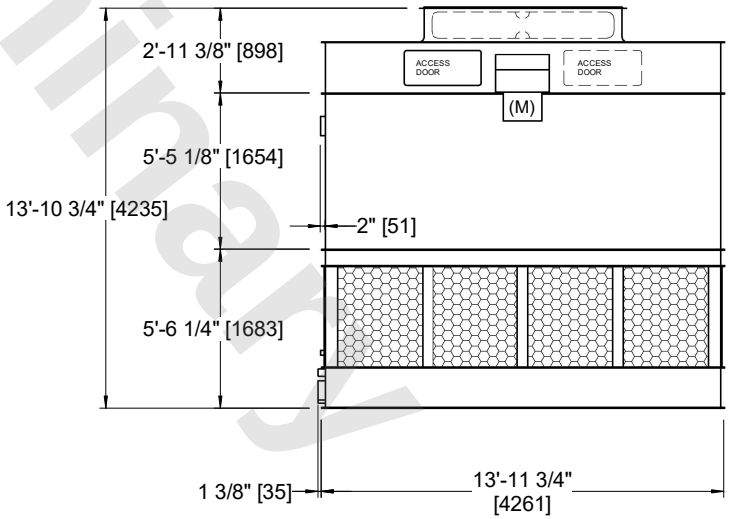

FACE A

SHIPPING WEIGHT	OPERATING WEIGHT	HEAVIEST SECTION WEIGHT	NO. OF SHIPPING SECTIONS	DRAWN BY:
11800 lbs+ [5355] kg+	19650 lbs+ [8915] kg+	3940 lbs+ [1790] kg+	4	JLG