UNIT	CLOSED CIRCUIT COOLER		EVAPCO, INC.	DWG. # CW4C071808-DRA-SF	REV. -
MODEL # ATWB 7-4J18-Z		SCALE NTS		SERIAL #	DATE 4/22/2026

NOTES:
1. (M)- FAN MOTOR LOCATION
2. HEAVIEST SECTION IS FAN/CASING SECTION
3. MPT DENOTES MALE PIPE THREAD
   FPT DENOTES FEMALE PIPE THREAD
   BFW DENOTES BEVELED FOR WELDING
   GVD DENOTES GROOVED
   FLG DENOTES FLANGE
   PE DENOTES PLAIN END
4. +UNIT WEIGHT DOES NOT INCLUDE ACCESSORIES (SEE ACCESSORY DRAWINGS)
5. MAKE-UP WATER PRESSURE 20 psi MIN [137 kPa], 50 psi MAX [344 kPa]
6. *-APPROXIMATE DIMENSIONS DO NOT USE FOR PRE-FABRICATION OF CONNECTING PIPING
7. SERIES FLOW PIPING AND AUX. CROSSOVER DRAIN BY OTHERS.
8. 3/4" [19MM] DIA. MOUNTING HOLES. REFER TO RECOMMENDED STEEL SUPPORT DRAWING.
9. DIMENSIONS LISTED AS FOLLOWS:
   ENGLISH FT-IN
   METRIC [mm]

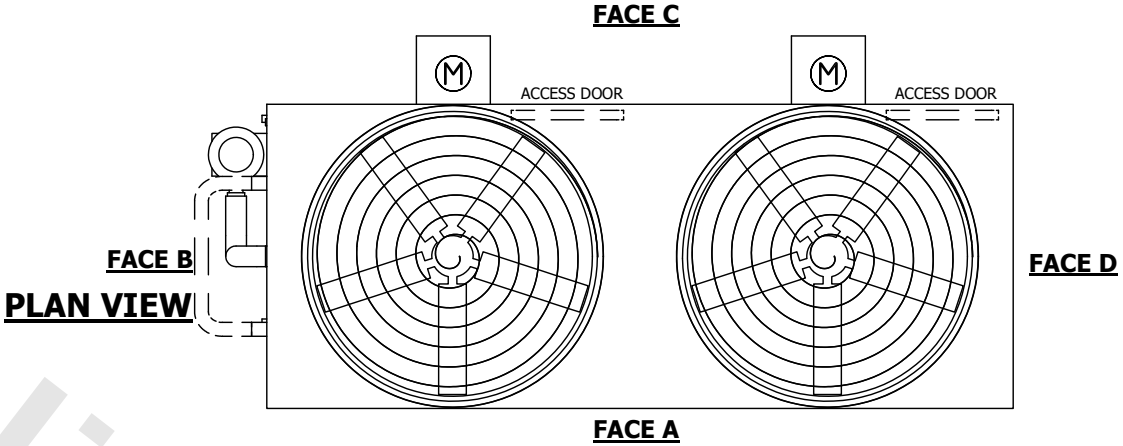

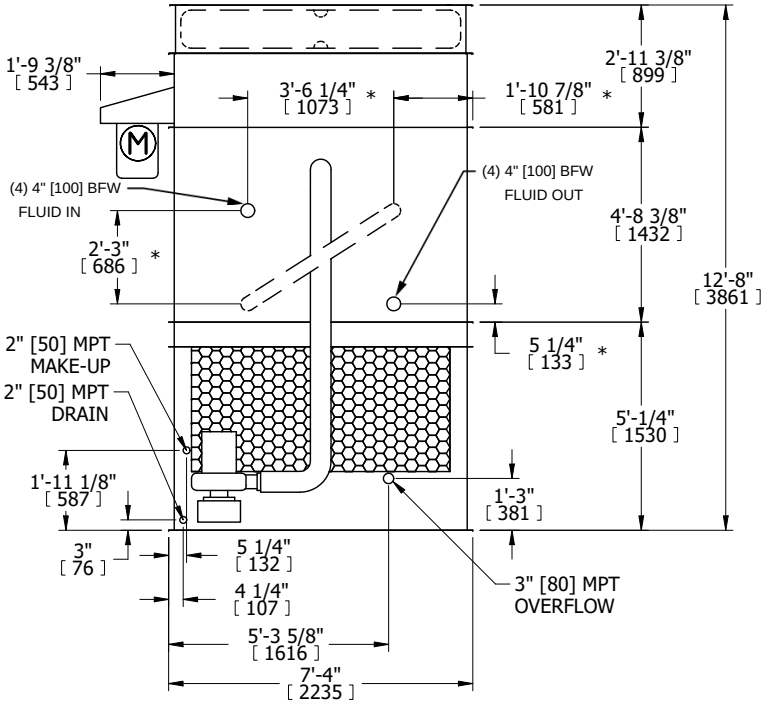

FACE B

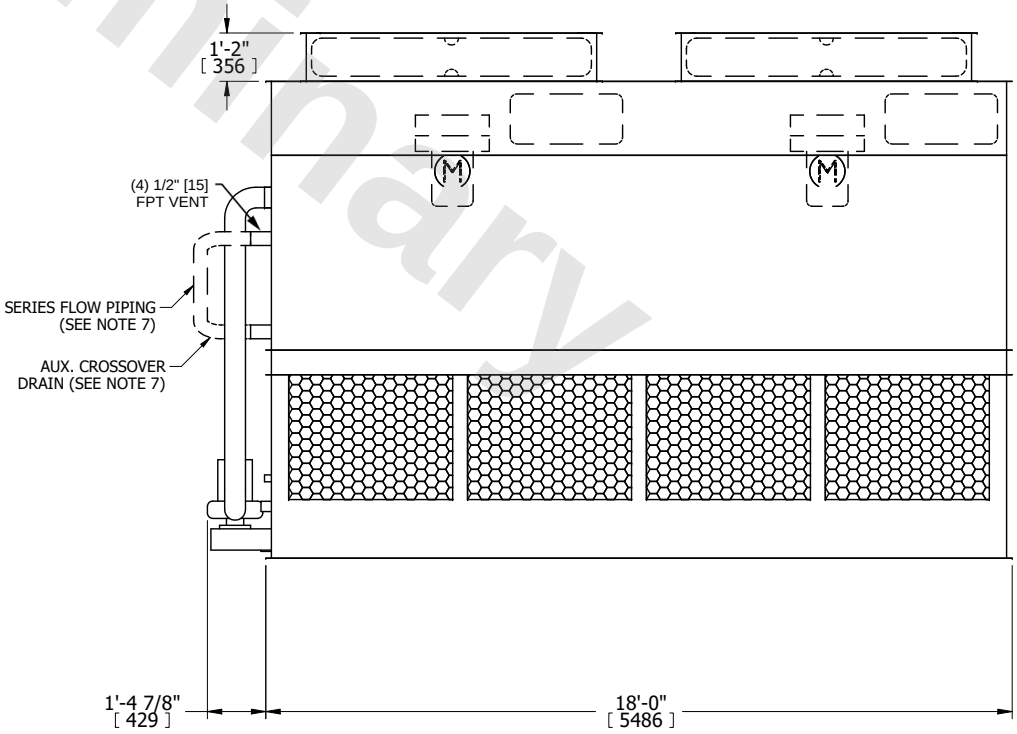

FACE A

Preliminary

SHIPPING WEIGHT	16350 lbs+ [7420] kg+	OPERATING WEIGHT	22380 lbs+ [10155] kg+	HEAVIEST SECTION WEIGHT	13330 lbs+ [6050] kg+	NO. OF SHIPPING SECTIONS	2	DRAWN BY:	TAM