UNIT	CLOSED CIRCUIT COOLER		EVAPCO, INC.	DWG. #	WV081214-DRF-SF	REV.	-
MODEL #	LRWB 8-7O12-Z	SCALE	NTS	SERIAL #		DATE	12/17/2025

NOTES:
1. (M)- FAN MOTOR LOCATION
2. MPT DENOTES MALE PIPE THREAD
   FPT DENOTES FEMALE PIPE THREAD
   BFW DENOTES BEVELED FOR WELDING
   GVD DENOTES GROOVED
   FLG DENOTES FLANGE
   PE DENOTES PLAIN END
3. +UNIT WEIGHT DOES NOT INCLUDE ACCESSORIES (SEE ACCESSORY DRAWINGS)
4. 3/4" [19mm] DIA. MOUNTING HOLES. REFER TO RECOMMENDED STEEL SUPPORT DRAWING
5. DIMENSIONS LISTED AS FOLLOWS: ENGLISH FT IN [METRIC] [mm]
6. * - APPROXIMATE DIMENSIONS DO NOT USE FOR PRE-FABRICATION OF CONNECTING PIPING.
7. MAKE-UP WATER PRESSURE 20 psi [137 kPa] MIN, 50 psi [344 kPa] MAX
8. SERIES FLOW PIPING AND AUX. CROSSOVER DRAIN ARE BY OTHERS

Preliminary

PLAN VIEW

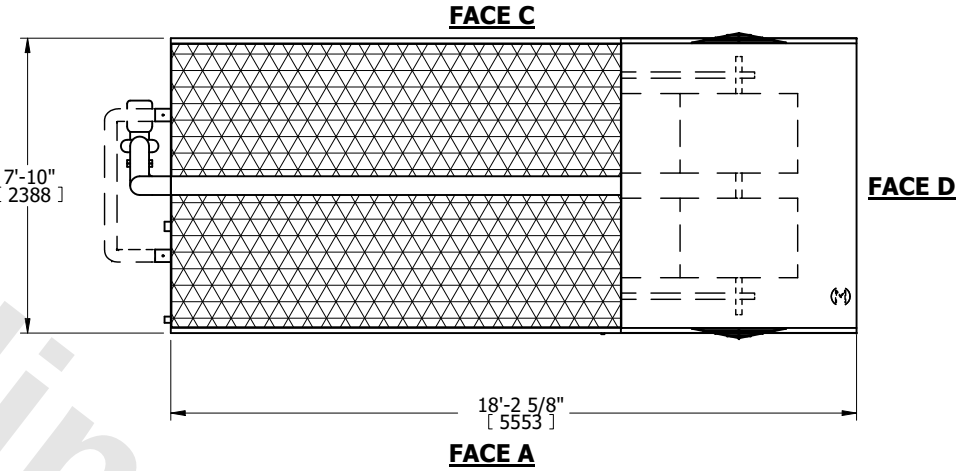

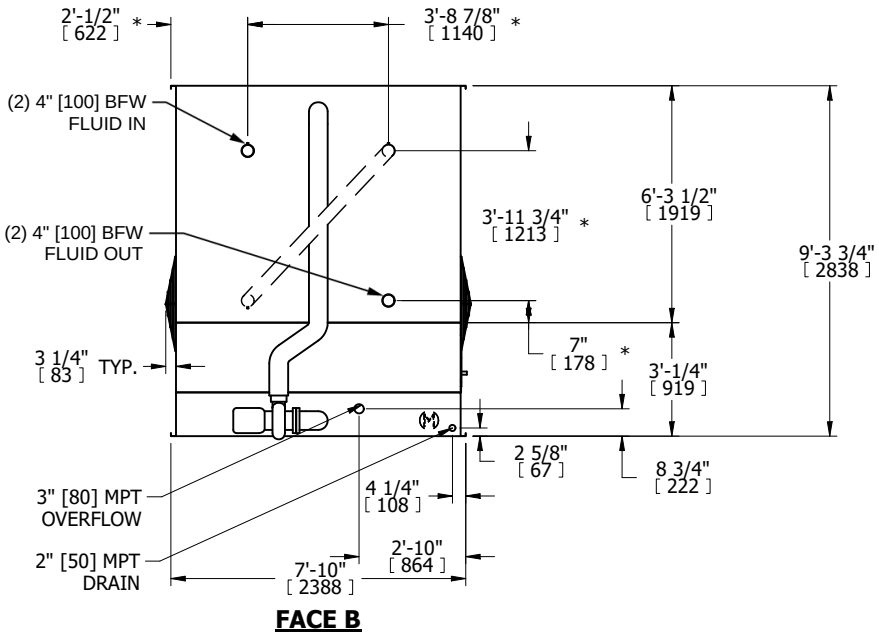

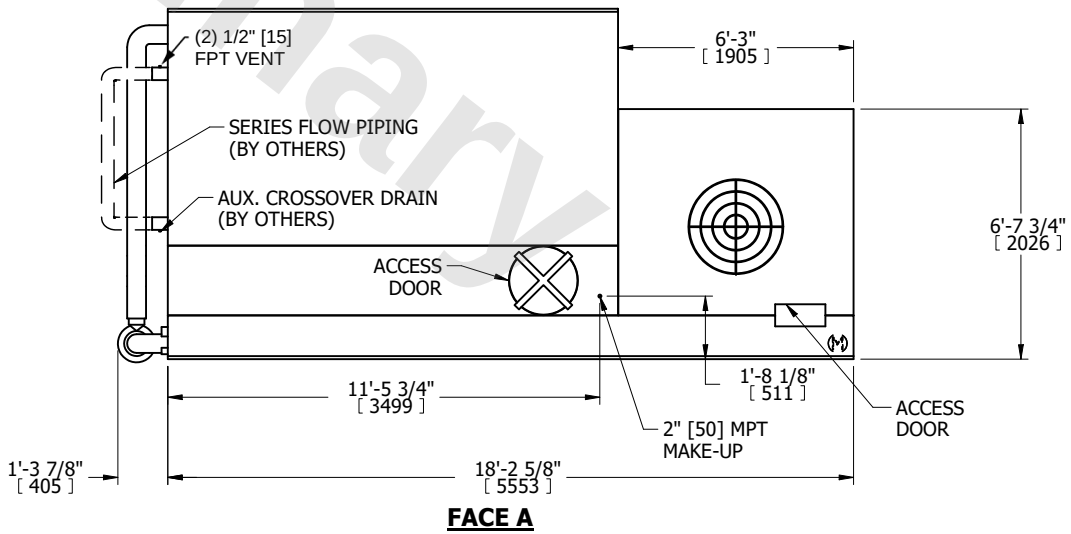

SHIPPING WEIGHT	14990 lbs+ [6800] kg+	OPERATING WEIGHT	23420 lbs+ [10625] kg+	HEAVIEST SECTION WEIGHT	14990 lbs+ [6800] kg+	NO. OF SHIPPING SECTIONS	1	DRAWN BY: