UNIT	CLOSED CIRCUIT COOLER	EVAPCO, INC.	DWG. # CW4C071212-DRA-ST	REV. -
MODEL # eco-ATWB 7-6K12	SCALE NTS		SERIAL #	DATE 5/17/2026

NOTES:
1. (M)- FAN MOTOR LOCATION
2. HEAVIEST SECTION IS FAN/CASING SECTION
3. MPT DENOTES MALE PIPE THREAD
   FPT DENOTES FEMALE PIPE THREAD
   BFW DENOTES BEVELED FOR WELDING
   GVD DENOTES GROOVED
   FLG DENOTES FLANGE
   PE DENOTES PLAIN END
4. +UNIT WEIGHT DOES NOT INCLUDE ACCESSORIES (SEE ACCESSORY DRAWINGS)
5. MAKE-UP WATER PRESSURE 20 psi MIN [137 kPa], 50 psi MAX [344 kPa]
6. *-APPROXIMATE DIMENSIONS DO NOT USE FOR PRE-FABRICATION OF CONNECTING PIPING
7. 3/4" [19mm] DIA. MOUNTING HOLES. REFER TO RECOMMENDED STEEL SUPPORT DRAWING.
8. DIMENSIONS LISTED AS FOLLOWS:
   ENGLISH FT-IN
   METRIC [mm]

Preliminary

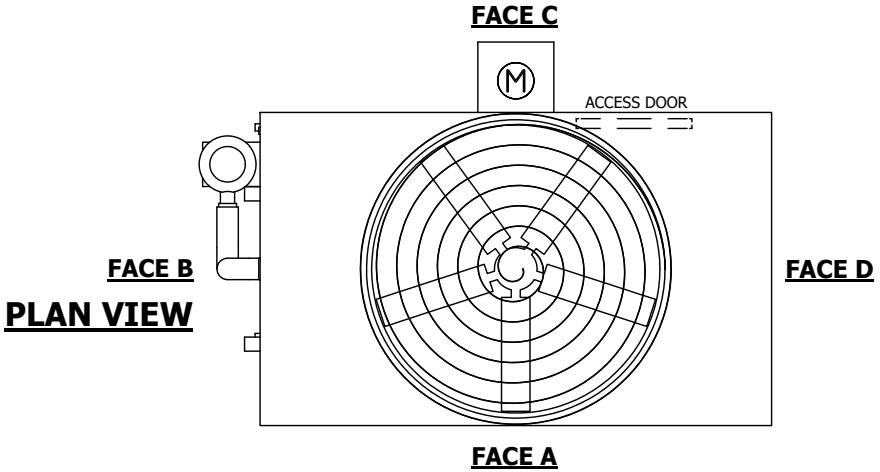

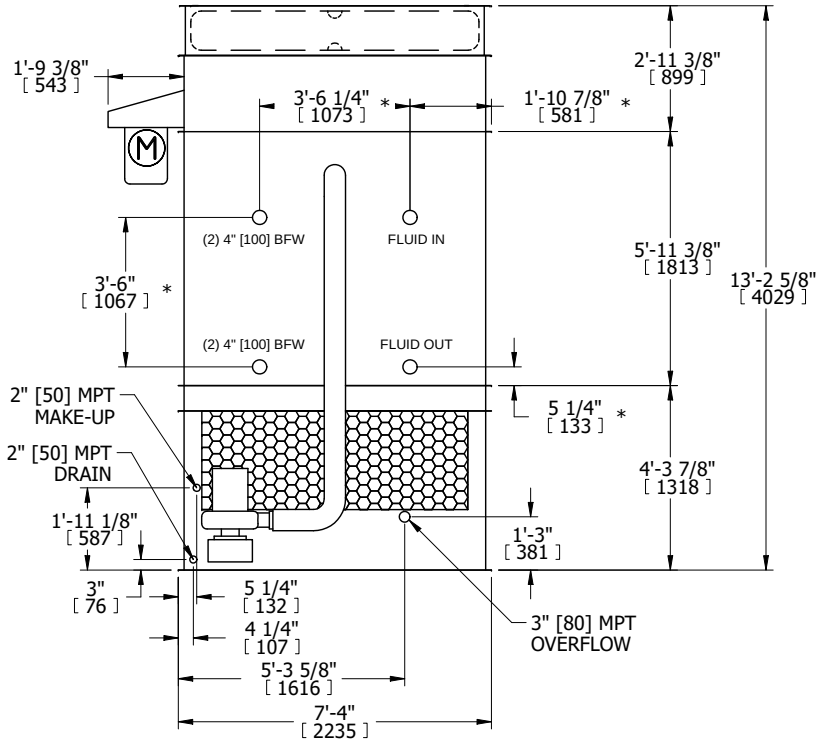

FACE B

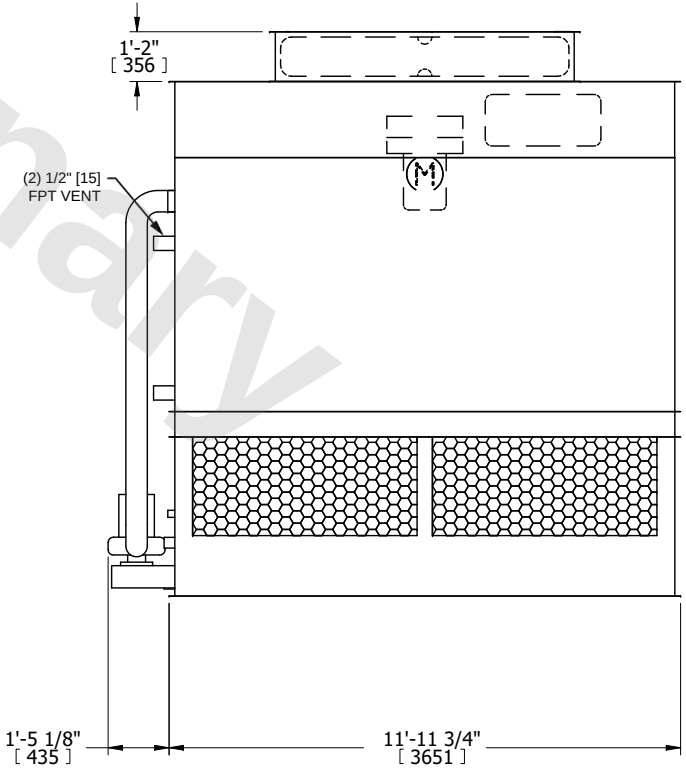

FACE A

SHIPPING WEIGHT	16770 lbs+ [7610] kg+	OPERATING WEIGHT	21730 lbs+ [9860] kg+	HEAVIEST SECTION WEIGHT	14870 lbs+ [6745] kg+	NO. OF SHIPPING SECTIONS	2	DRAWN BY:	TAM