UNIT	eco-ATWB-H 17-3J14-Z-U34	EVAPCO, INC.	DWG. #	SLAW1714-DE	
TITLE	STEEL SUPPORT CONFIGURATION		SCALE	N.T.S.	DRAWN BY JLG

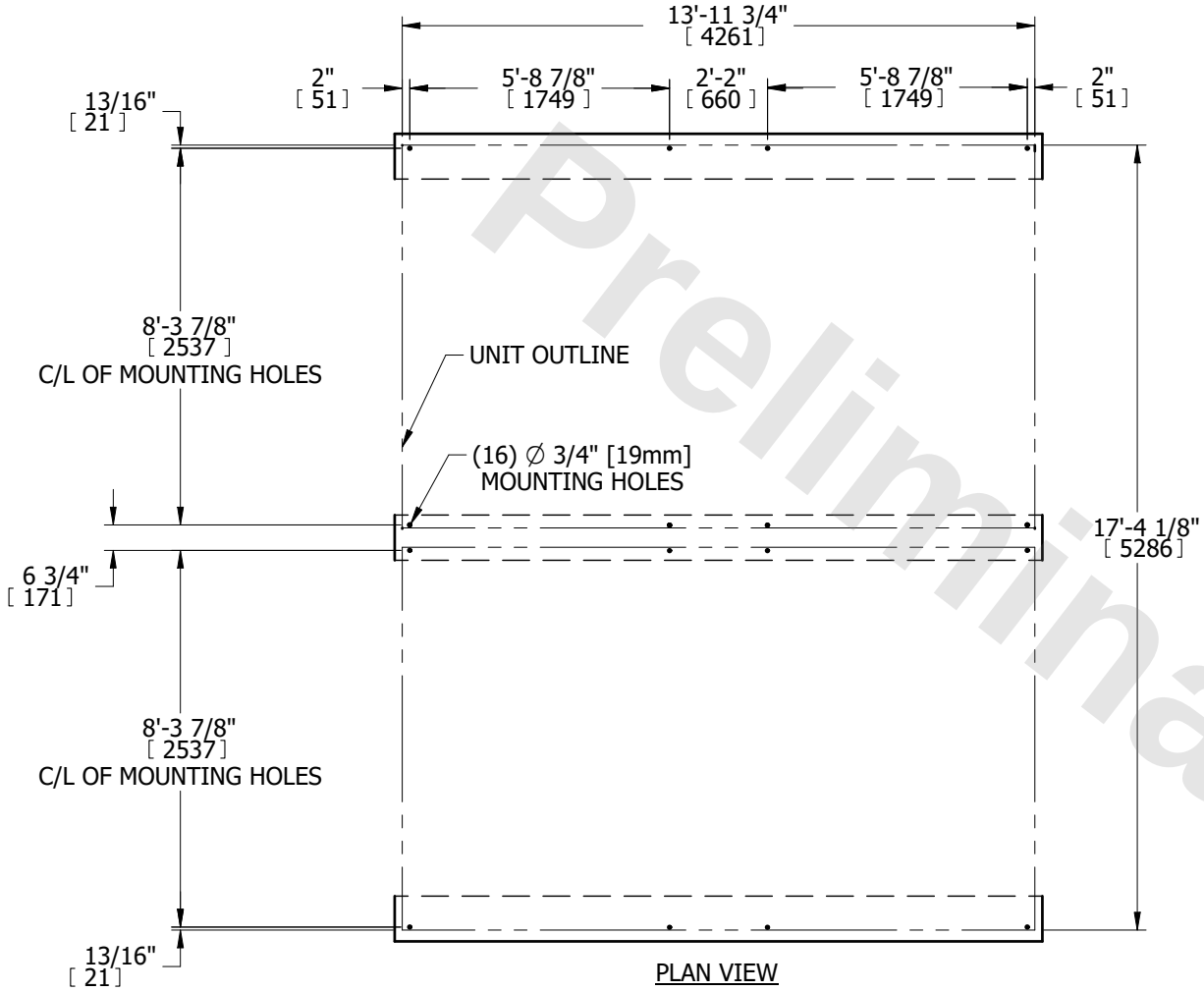

PLAN VIEW

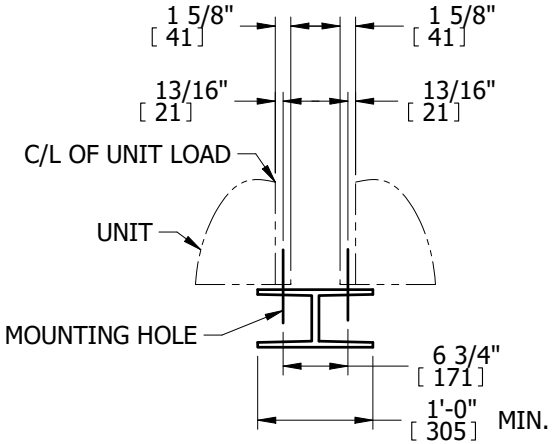

CENTER ARRANGEMENT

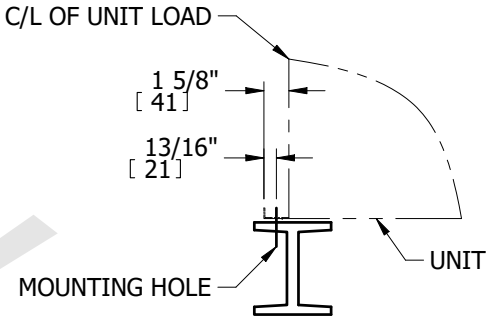

TYPICAL END VIEW

Preliminary

NOTES:

1. BEAMS SHOULD BE SIZED IN ACCORDANCE WITH ACCEPTED STRUCTURAL PRACTICES. MAXIMUM DEFLECTION OF BEAM UNDER UNIT TO BE 1/360 OF UNIT LENGTH NOT TO EXCEED 1/2" [13mm].
2. DEFLECTION MAY BE CALCULATED BY USING 55% OF THE OPERATING WEIGHT AS A UNIFORM LOAD ON EACH BEAM. SEE CERTIFIED PRINT FOR OPERATING WEIGHT.
3. SUPPORT BEAMS AND ANCHOR HARDWARE ARE TO BE FURNISHED BY OTHERS. ANCHOR HARDWARE TO BE ASTM A325 5/8" [16mm] BOLT OR EQUIVALENT.
4. BEAMS MUST BE LOCATED UNDER THE FULL LENGTH OF THE PAN SECTION.
5. SUPPORTING BEAM SURFACE MUST BE LEVEL. DO NOT LEVEL THE UNIT BY PLACING SHIMS BETWEEN THE UNIT MOUNTING FLANGE AND THE SUPPORTING BEAM.
6. THE FACTORY RECOMMENDED STEEL SUPPORT CONFIGURATION IS SHOWN. CONSULT THE FACTORY FOR ALTERNATE SUPPORT CONFIGURATIONS.
7. UNIT SHOULD BE POSITIONED ON STEEL SUCH THAT THE ANCHORING HARDWARE FULLY PENETRATES THE BEAM'S FLANGE AND CLEARS THE BEAM'S WEB.
8. FOR ALL MULTIPLE CELL UNITS, OPERATING WEIGHT OF EACH CELL IS FOUND BY DIVIDING TOTAL OPERATING WEIGHT BY THE NUMBER OF CELLS.
9. WHEN VIBRATION ISOLATION IS REQUIRED, THE VIBRATION ISOLATORS (BY OTHERS) MUST BE LOCATED UNDER THE SUPPORTING STEEL BEAMS AND NOT BETWEEN THE SUPPORTING STEEL BEAMS AND THE UNIT.
10. THE CENTER BEAM SHOULD HAVE A MINIMUM WIDTH OF 12" [305mm]
11. DIMENSIONS LISTED AS FOLLOWS: ENGLISH FT-IN [METRIC] [mm]