# EVAPCO, INC.

| UNIT | MODEL # | SCALE | DWG. # | REV. | DATE | SERIAL # |
|---|---|---|---|---|---|---|
| CLOSED CIRCUIT COOLER | eco-ATWB-H 12-4J12-U44 | N.T.S. | EGH1212MR-DRB-ST | - | 4/7/2026 | |

NOTES:
1. (M)- FAN MOTOR LOCATION
2. HEAVIEST SECTION IS COIL SECTION
3. MPT DENOTES MALE PIPE THREAD
   FPT DENOTES FEMALE PIPE THREAD
   BFW DENOTES BEVELED FOR WELDING
4. +UNIT WEIGHT DOES NOT INCLUDE ACCESSORIES (SEE ACCESSORY DRAWINGS)
5. MAKE-UP WATER PRESSURE
   20 psi MIN [137 kPa], 50 psi MAX [344 kPa]
6. DIMENSIONS LISTED AS FOLLOWS:
   ENGLISH IN
   [METRIC] [mm]
7. * - APPROXIMATE DIMENSIONS DO NOT USE FOR PRE-FABRICATION OF CONNECTING PIPING.

Preliminary

**FACE 2**
**PLAN VIEW**

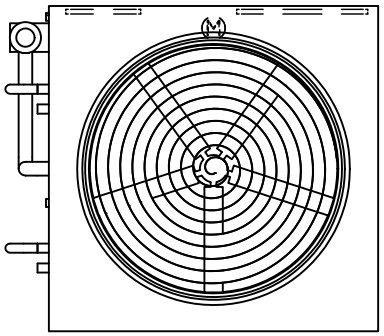

**FACE 1**

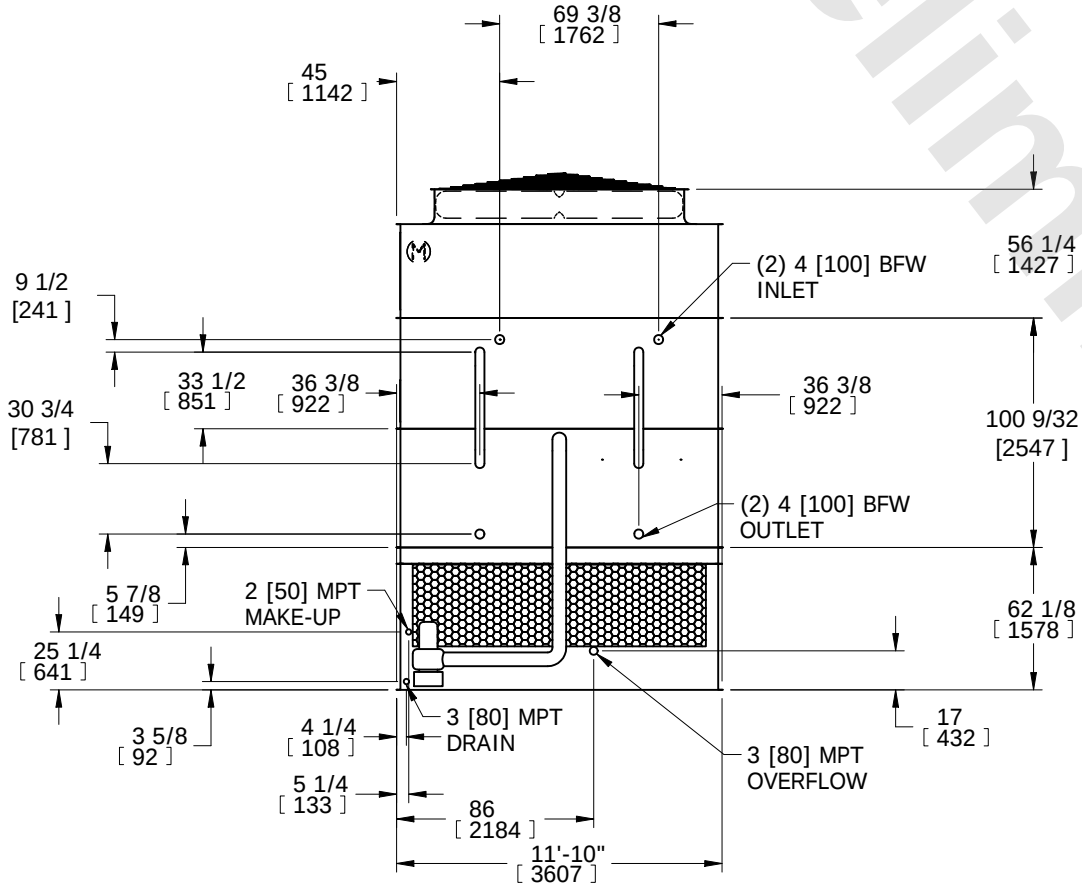


**FACE 2**

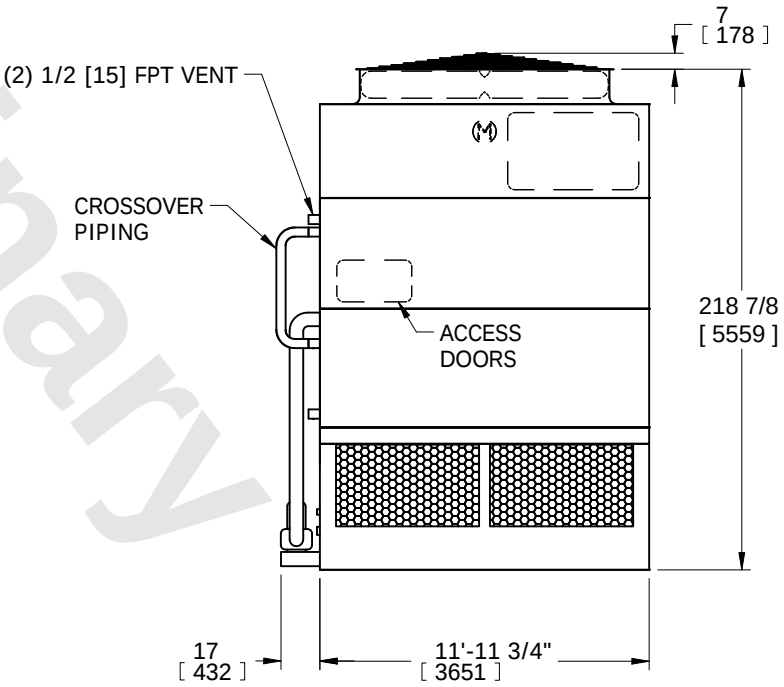


**FACE 1**

| SHIPPING WEIGHT | OPERATING WEIGHT | HEAVIEST SECTION WEIGHT | NO. OF SHIPPING SECTIONS | DRAWN BY: |
|---|---|---|---|---|
| 26010 lbs+ [11800] kg+ | 35780 lbs+ [16230] kg+ | 20470 lbs+ [9285] kg+ | 3 | SFR |