EVAPCO, INC.

UNIT	MODEL #	SCALE	DWG. #	REV.	DATE	SERIAL #
CLOSED CIRCUIT COOLER	eco-ATWB-H 20-2K18-U34	N.T.S.	EGH6M18MR-DRD-ST	-	6/21/2026	

NOTES:
1. (M)- FAN MOTOR LOCATION
2. HEAVIEST SECTION IS COIL SECTION
3. MPT DENOTES MALE PIPE THREAD
   FPT DENOTES FEMALE PIPE THREAD
   BFW DENOTES BEVELED FOR WELDING
4. +UNIT WEIGHT DOES NOT INCLUDE ACCESSORIES (SEE ACCESSORY DRAWINGS)
5. MAKE-UP WATER PRESSURE
   20 psi MIN [137 kPa], 50 psi MAX [344 kPa]
6. DIMENSIONS LISTED AS FOLLOWS:
   ENGLISH IN
   [METRIC] [mm]
7. * - APPROXIMATE DIMENSIONS DO NOT USE FOR PRE-FABRICATION OF CONNECTING PIPING.

Preliminary

FACE 2
PLAN VIEW

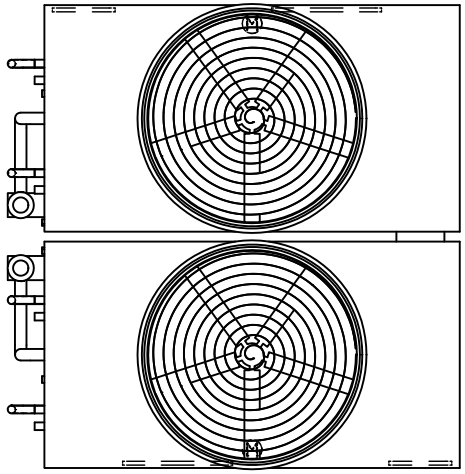

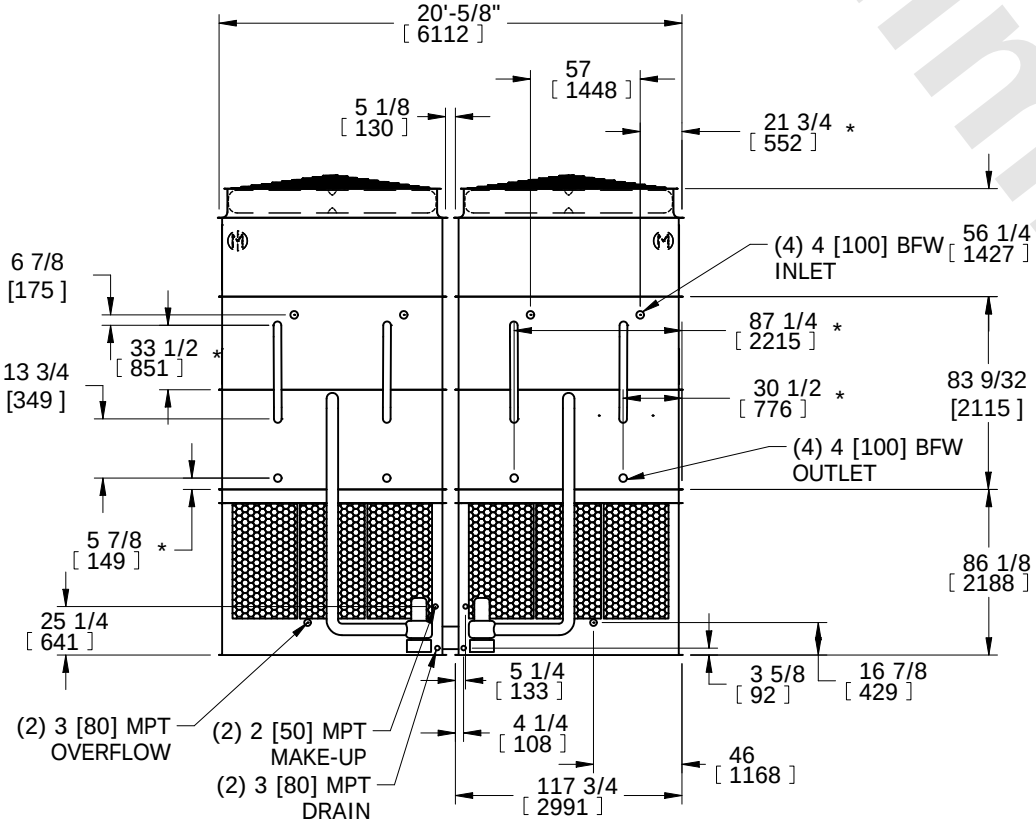

FACE 2

FACE 1

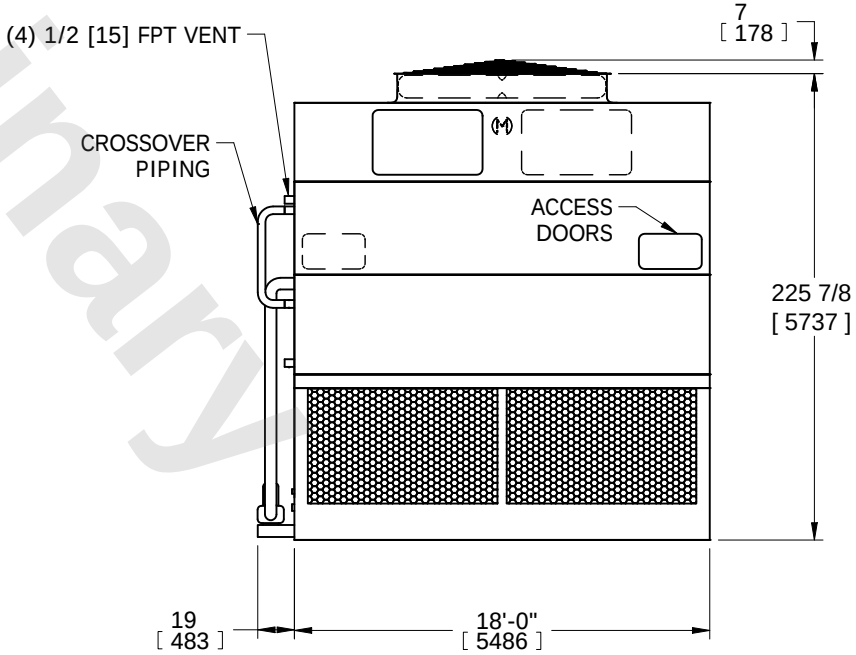

FACE 1

SHIPPING WEIGHT	OPERATING WEIGHT	HEAVIEST SECTION WEIGHT	NO. OF SHIPPING SECTIONS	DRAWN BY:
47230 lbs+ [21425] kg+	67450 lbs+ [30595] kg+	16650 lbs+ [7550] kg+	6	SFR