EVAPCO, INC.

UNIT	MODEL #	SCALE	DWG. #	REV.	DATE	SERIAL #
CLOSED CIRCUIT COOLER	eco-ATWB-H 9-3J14-U34	N.T.S	EGH0914MR-DRC-ST	-	10/22/2025	

NOTES:
1. (M)- FAN MOTOR LOCATION
2. HEAVIEST SECTION IS COIL SECTION
3. MPT DENOTES MALE PIPE THREAD
   FPT DENOTES FEMALE PIPE THREAD
   BFW DENOTES BEVELED FOR WELDING
4. +UNIT WEIGHT DOES NOT INCLUDE ACCESSORIES (SEE ACCESSORY DRAWINGS)
5. MAKE-UP WATER PRESSURE 20 psi MIN [137 kPa], 50 psi MAX [344 kPa]
6. DIMENSIONS LISTED AS FOLLOWS:
   ENGLISH IN
   [METRIC] [mm]
7. * - APPROXIMATE DIMENSIONS DO NOT USE FOR PRE-FABRICATION OF CONNECTING PIPING.

FACE 2
PLAN VIEW

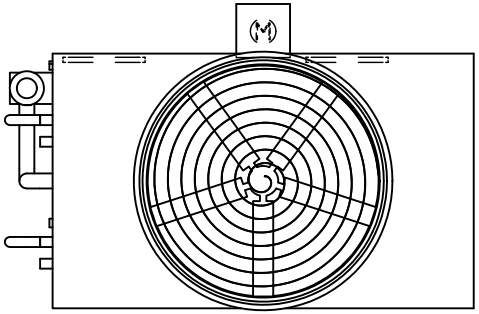

FACE 1

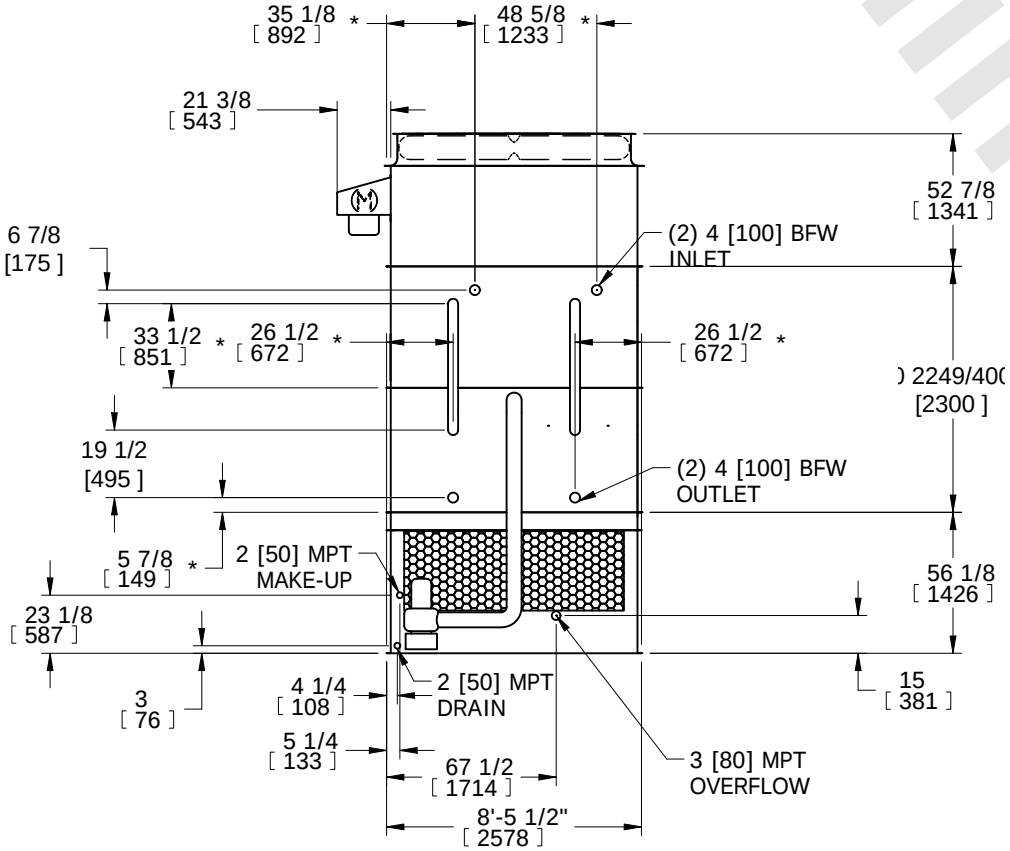

FACE 2

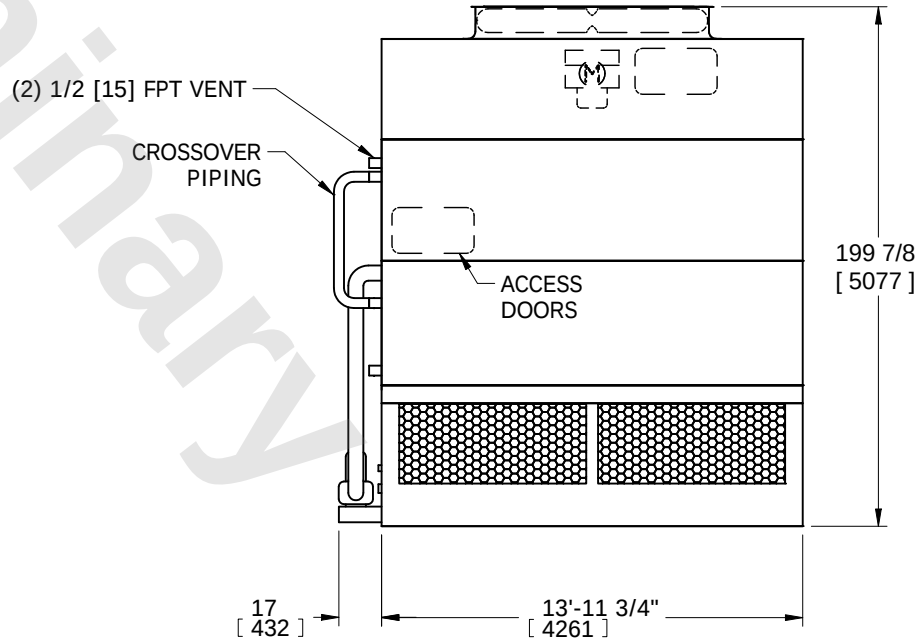

FACE 1

Preliminary

SHIPPING WEIGHT	OPERATING WEIGHT	HEAVIEST SECTION WEIGHT	NO. OF SHIPPING SECTIONS	DRAWN BY:
17720 lbs+ [8040] kg+	24160 lbs+ [10960] kg+	13090 lbs+ [5935] kg+	3	SFR